MAKING MODERN LIVING POSSIBLE

Energy Saving Solutions for renovation of heating and cooling systems

18 cases

with payback time

calculations show you how fast your investment will be repaid by energy savings.

www.hbc.danfoss.com

Structure

Dear Reader,

The main reason of the material developed and prepared by our team of the Hydronic Balancing & Control department was to answer the basic questions, namely: whether investments in renovation of engineering systems like central heating, cooling or hot water supply systems are economically rational? When can return of financial costs for above mentioned renovations be expected?

At the beginning the phrase 'material developed' was mentioned by us, we would like to clarify this. The development of the material means collecting information throughout many years from users (clients of Danfoss) concerning energy consumption before and after renovation. This information has been obtained from bills issued by heat or electric energy suppliers – therefore, this is reliable referential material which allows to estimate effectiveness of renovation, which is the key purpose of such investments.

When analyzing each of the presented example, realistic financial costs were taken into consideration related to designing, mounting and purchasing of the equipment as well as launch costs, when applicable.

This data was collected in a uniform way, special attention was paid to accurate description of when renovation was done and what was the subject of renovation. Very often the process of renovation was realized in a few stages (due to limited financial resources). The form of description applied by us allows to identify precisely, which stage brings what results (e.g. mounting of thermostatic valves, mounting of balancing valves, etc.)

We have decided (upon receiving clients' consent) to provide information about addresses and places where investment was made available. First of all, it gives the possibility to check the presented data (or probably, to challenge the information). Secondly, the place of investment defines the costs in a considerable way, as different prices are applied for design, mounting, purchase of equipment or energy depending on the country (Bosnia, Czech Republic, Germany, Hungary, Malaysia, Poland).

When making calculations, in order to directly compare energy consumption we have used specialized methods of conversion (e.g. degree-day method) normally applied by energy auditors.

The presented examples were grouped according to topics, namely:

- chapter 2: here we present the results obtained when typical two-pipe central heating systems were renovated by mounting of thermostatic radiator valves (RTD, RA and RTS) as well as automatic balancing valves (pressure regulators of ASV type). Pressure regulators provide stable working conditions for thermostatic valves which, in their turn, help achieve additional reduction of energy consumption, while providing high heating comfort.
- chapter 3: here we present results of one-pipe heating system renovation. In this case due to specific character of the system, apart from using thermostatic valves other type of balancing valves should be used, i.e. automatic flow-controller (of AB-QM type) which can be extended with thermostatic module (AB-QT) thanks to which we gain possibility to control flow in risers by load in riser (when thermostatic valves are closed – the flow in riser is reduced to a minimum as only heat losses are compensated in the system), balancing is effected by control of return temperature in riser.
- chapter 4: renovation of hot water supply system as a result of thermostatic circulation valves mounting (MTCV). These valves provide thermostatic balancing of the system as well as reduction of the circulation flow to essential minimum in order to compensate heat losses and provide required temperature at the receiving point at user's place.
- chapter 5: modernization of cold water supply system in air conditioning systems for air-handling units (AHU) and fancoils (FCU). In these systems new type of regulation valves are applied – valves free from pressure fluctuations in the system (AB-QM).
- chapter 6: here we present results of modernization in macro scale to show the amount of generated energy, which can have considerable meaning for large projects, e.g. when global projects for the scale of city or region are implemented and such projects are financed by governmental organizations or special thermo-renovation funds. Modernization in macro scale includes both renovation of central heating systems, hot water supply systems and heating district sub-stations.

The return on investment periods presented here vary from 0,5 to 6 years depending on the application, size of building and type of system. It is worth mentioning, that high profitability of the mentioned investments was achieved due to use of Danfoss equipment which guarantees high effectiveness. These periods cannot be a referential point for any other valves available on the market!

We hope that the given examples will facilitate a decision-making process related to modernization, as currently renovation investments are among the most profitable. Of course, the decision itself does not mean that we do not have responsibility to design modernization correctly, to optimize selection of valves, to mount and launch the system appropriately.

Danfoss offers consultation assistance on each stage of modernization investment process taking into consideration the key purpose, which is to achieve maximum energy saving and optimize work of the system while providing maximum comfort for users.

We wish you good luck with your renovation investments,

Team of Hydronic Balancing & Control, Danfoss.

1.1 Recommended solution for heating systems

HEATING SYSTEM

- ONE PIPE system
  - Systems with or without TRV'S
  - Systems with or without TRV'S
- TWO PIPE system
  - Systems with TRV'S
    - Without presetting
    - With presetting

RECOMMENDED ADJUSTABLE FLOW LIMITER:
AB-QM, QT

ACCEPTABLE
MSV-BD LENO,
MSV-B/S/O LENO

RECOMMENDED
ASV-P + ASV-I
ASV-PV + ASV-I

RECOMMENDED
ASV-P + ASV-M
ASV-PV + ASV-M

RECOMMENDED
ASV-PV + MSV-F2 (with impulse tube)

Sanitary water system

Systems without TRV'S

Upgrade to TRV'S not possible

Upgrade to TRV'S is possible

Domestic hot water circulation system

RECOMMENDED

MSV-B/S/O LENO, MSV-BD LENO /USV–I

RECOMMENDED

USV-M + USV-I (upgradable)

RECOMMENDED

MTCV, CCR2

1.2 Recommended solution for cooling systems

COOLING SYSTEM

CONSTANT FLOW

Automatic balancing

Manual balancing

RECOMMENDED ADJUSTABLE FLOW LIMITER:
AB-QM

ACCEPTABLE

MSV-F2, MBV-BD LENO, MSV-B/O/S LENO

VARIABLE FLOW

Pressure controller

Fixed pressure

RECOMMENDED

ASV-P + ASV-M

Adjustable pressure

RECOMMENDED

ASV-PV + ASV-I

RECOMMENDED

ASV-PV (flange) + MSV-F2 (with impulse tube)

Combined pressure independent control

Control valves with actuators and automatic adjustable flow limiter

RECOMMENDED

AB-QM + TWA-Z

AB-QM + ABNM

AB-QM + AMV(E)

2.1 Two-pipe heating system in medium high residential buildings

Type of building	Name of project	Main data	Picture of building
 Medium high building	**Building Society "Na Skarpie" Koszalin, Poland**	• Address: Dąbroszczaków 3 • Number of floors: 12 • Number of staircases: 1 • Number of flats: 68 • Heated space: 13.885 m³ • Number of radiators: 637 • Number of risers: 30	

THE PROJECT

This building was built in 1977 with blocks of flat technology (concrete panels). The modernisation has been done in several steps. In 1994 TRV's and in 1995 heat cost allocators were installed on the radiators. In 1999 the wall was insulated. In 2002 Δp controllers were installed in the bottom of the risers. In the investigated period the outdoor temperature was varying in a wide range therefore the correction of energy usage is very important.

USED DANFOSS EQUIPMENT FOR RENOVATION (IN 1996 AND 2002)

A | Thermostatic radiator valves for each radiator: RTD-N + thermo head RTD
Dimension: DN 10-20 (637 all together)

B | Differential pressure controller pair in the bottom of the riser: ASV-PV + ASV-M
Dimension: DN 15-32 (10, 5, 10, 5 pcs.)

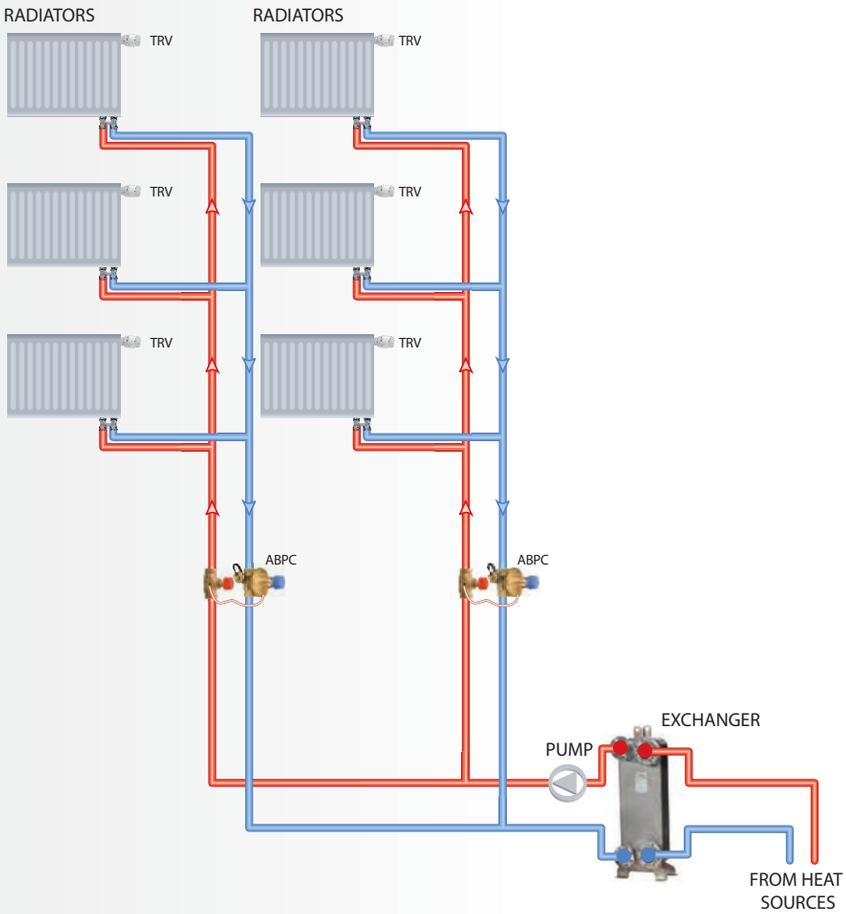

TRV – Thermostatic Radiator Valves
ABPC – Automatic Balancing Pressure Controller

SAVINGS

Investment type	ASV Installation
Investment costs [€]	4947
Av. yearly energy saving [GJ]	383,2
Energy price (DH) [€/GJ]	8,2
Pay back time [year]	**1,6**

Calculation is based on year 2001 compared to 2002-2008

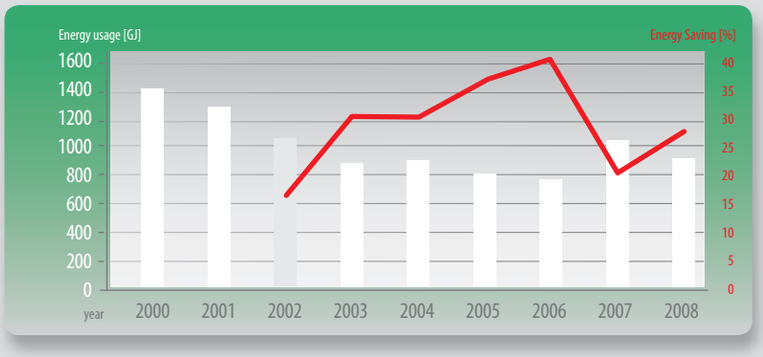

INVESTMENT COSTS

Equipment	Pcs.	Price [€]	Installation costs [€]	Sum
Δp controller into the risers	30	4644	330	4947

ENERGY USAGE AND ENERGY SAVING OF BUILDING

Year	Energy usage (heating) [GJ]	Corrected energy usage to 6,7°C	Saving in % compa-red to 2000	Saving in % due to automatic balancing valve comp. to 2001	Average outdoor temp. [°C]	Average energy saving [GJ]	Action
2000	1 431	1 431			6,70		
2001	1 761	1 296	9,5%		4,80		
2002	1 466	1 079	24,6%	**16,7%**	4,80		ASV installation
2003	1 305	886	38,1%	**31,7%**	4,19	383,16	
2004	1 173	895	37,5%	**31,0%**	5,05		
2005	1 134	801	44,0%	**38,2%**	4,50		Roof insulation
2006	1 131	769	46,3%	**40,7%**	4,20		
2007	1 109	1 031	28,0%	**20,4%**	6,30		
2008	1 105	930	35,1%	**28,3%**	5,70		

CONCLUSION

The installation of dedicated differential pressure controllers in the bottom of the risers bring an average of 31,3% energy saving on a yearly base. (The installation of ASV-PV valves is shown with a yellow column in above diagram). In the year 2002 when the ASV installation was done, the energy saving is half of the average, due to the result of installation concerns a half season only.

The colder the outdoor temperature, the higher the energy saving will be, due to the Δp controller (year 2006). The roof insulation does not result in perceptible energy saving. (In a high building only a few flats are affected by this action). The pay back time of a Δp controller installation (less than 2 years) is very good.

2.2 Two-pipe heating system in medium high residential buildings

Type of building	Name of project	Main data	Picture of building
 Medium high building	**Building Society "Wspólny Dom" Szczecin, Poland**	• Address: Chopina 4 • Number of floors: 11 • Number of staircases: 1 • Number of flats: 66 • Heated space: 9.808 m³ • Number of radiators: 389 • Number of risers: 26	

THE PROJECT

This building was built in 1982 with blocks of flat technology (concrete panels). The modernisation has been done in several steps. In 1996 TRV's were installed in front of the radiators and in 2004 the wall and roof were insulated. In 2003 heat cost allocators were mounted onto the radiators. (In that time the manual balancing remained original). After further insulation, in 2005 the building was equipped with Δp riser controllers. In the investigated period the outdoor temperature was varying in a wide range therefore the correction of energy usage is very important.

USED DANFOSS EQUIPMENT FOR RENOVATION (IN 1996 AND 2005)

A | Thermostatic radiator valves for each radiator: RTD-N + thermo head RTD
Dimension: DN 15 (389 pcs.)

B | Differential pressure controller pair in the bottom of the riser: ASV-PV + ASV-M
Dimension: DN 15-25 (26 pcs.)

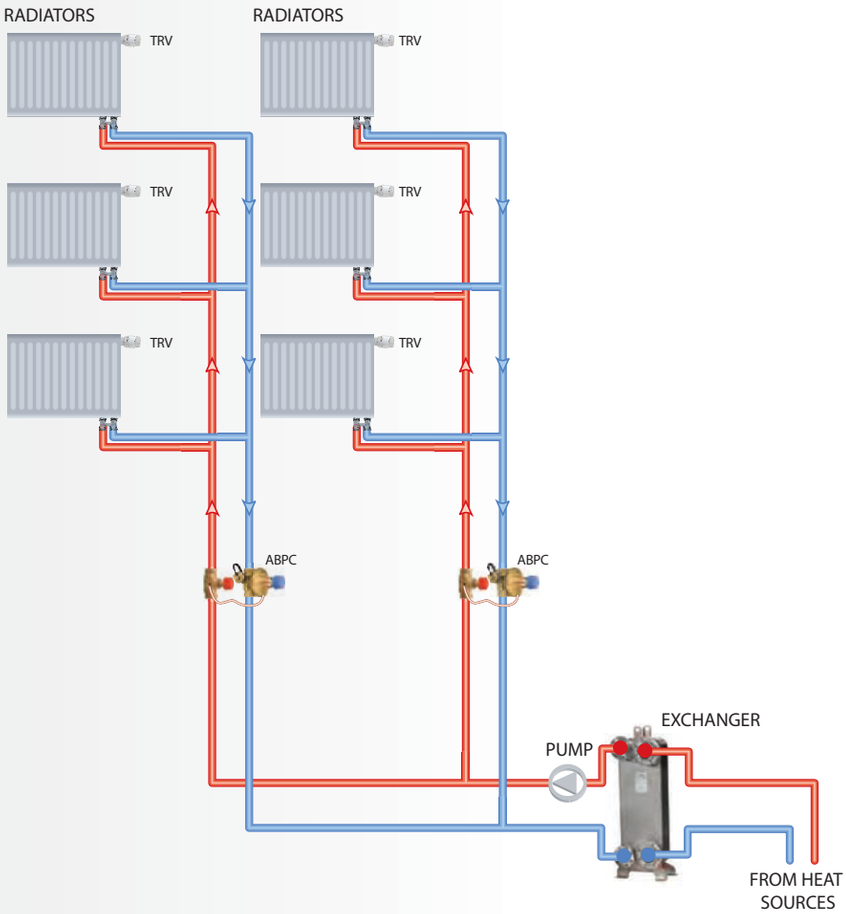

TRV – Thermostatic Radiator Valves
ABPC – Automatic Balancing Pressure Controller

SAVINGS

Investment type	ASV-PV/M
Investment costs [€]	3724
Av. yearly energy saving [GJ]	276,3
Energy price (DH) [€/GJ]*	13,2
Pay back time [year]	**1,0**

* This price is based on local DH company price

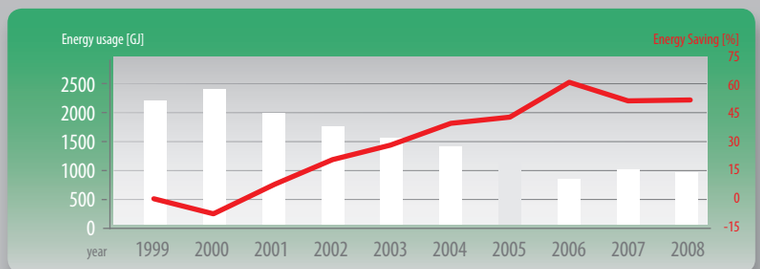

INVESTMENT COSTS

Equipment	Pcs.	Price [€]	Installation costs [€]	Sum
Δp controller into the risers	26	2550	1174	3724

ENERGY USAGE AND ENERGY SAVING OF BUILDING

Year	Energy usage (heating) [GJ]	Corrected energy usage to 5,1°C	Saving in % compared to 1999	Saving due to automatic balancing copm. to 2003-2005	Average outdoor temp. [°C]	Average yearly energy saving (GJ)	Action
1999	2169	2169	0,0%		5,1		TRV installation in 1996
2000	1787	2348	-8,3%		6,75		-
2001	2045	2001	7,7%		4,95		
2002	1792	1712	21,1%		4,78		-
2003	1837	1534	29,3%		3,74		HCA* installation
2004	1354	1360	37,3%		5,13		Wall and roof insulation
2005	1141	1236	43,0%		5,63		ASV installation
2006	1024	868	60,0%	**29,8%**	3,86	276,3	
2007	851	1012	53,3%	**18,1%**	6,20		
2008	867	1000	53,9%	**19,1%**	6,02		

* HCA – Heat Cost Allocator

CONCLUSION

With insulation of walls and roof in this building we can achieve significant energy saving (20-25%) With the application of heat cost allocators we are able to reduce the energy usage with another ~15%. The installation of dedicated differential pressure controllers in the bottom of the risers cause an average of 22% further energy saving on a yearly base. (The installation of ASV-PV valves is shown with a yellow column in above diagram). The energy saving due to Δp controller is projecting in case of low outside temperature (year 2006). The pay back time of Δp controller installation (1 year) is very good.

2.3 Two-pipe heating system in long residential buildings

Type of building	Name of project	Main data	Picture of building
 Long building	**Building Society "Wspólny Dom"** **Szczecin, Poland**	• Address: Zakole 27-36 • Number of floors: 5 • Number of staircases: 10 • Number of flats: 73 • Heated space: 14.938 m³ • Number of radiators: 542 • Number of risers: 104	

THE PROJECT

This building was built in 1976 with blocks of flat technology (concrete panels). The modernisation has been done in several steps. In 1996 thermostatic radiator valves (TRV's) were installed in front of the radiators. The building was insulated step by step, in 1999 the end of the building, in 2004 the roof and the remaining walls in 2007. In 2003 heat cost allocators were mounted onto the radiators. (In that time the manual balancing system remained original). In 2005 the building was equipped with Δp riser controllers. In 2006 the domestic hot water (DHW) circulation was modernised with a return temperature limiter (see chapter 4.1).

USED DANFOSS EQUIPMENT FOR RENOVATION (IN 1996 AND 2005)

A | Thermostatic radiator valves for each radiator: RTD-N + thermo head RTD
Dimension: DN 15 (542 pcs.)

B | Differential pressure controller pair in the bottom of the riser: ASV-PV + ASV-M
Dimension: DN 15-25 (104 pcs.)

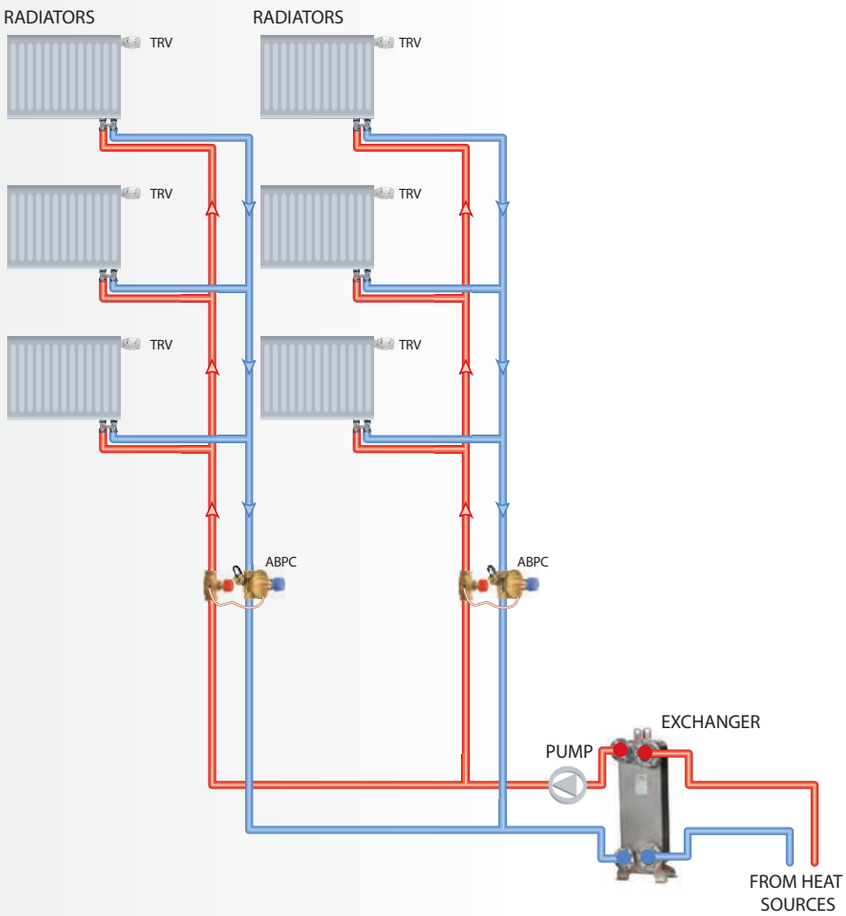

TRV – Thermostatic Radiator Valves
ABPC – Automatic Balancing Pressure Controller

SAVINGS

Investment type	ASV-PV/M
Investment costs [€]	16074
Av. yearly energy saving [GJ]	205,0
Energy price (DH) [€/GJ]*	13,2
Pay back time [year]	**5,9**

* This price is based on local DH company price

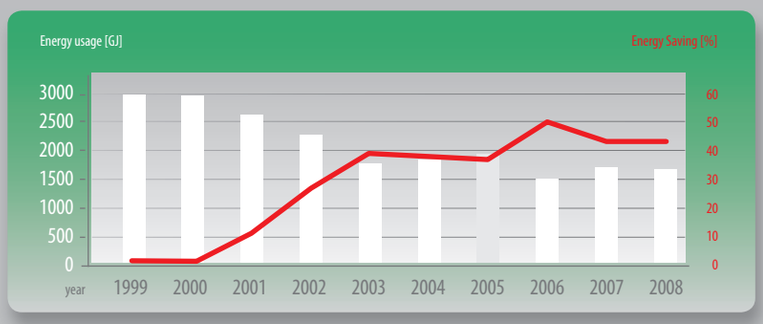

INVESTMENT COSTS

Equipment	Pcs.	Price [€]	Installation costs [€]	Sum
Δp controller into the risers	104	11640	4434	16074

ENERGY USAGE AND ENERGY SAVING OF BUILDING

Year	Energy usage (heating) [GJ]	Corrected energy usage to 5,1°C	Saving in % compared to 1999	Saving due to automatic balancing comp. to 2003-2005	Average outdoor temp. [°C]	Average yearly energy saving (GJ)	Action
1999	3026	3026	0,0%		5,1		part of wall insulation*
2000	2284	3002	0,8%		6,75		-
2001	2599	2544	15,9%		4,95		
2002	2306	2203	27,2%		4,78		-
2003	2208	1845	39,0%		3,74		HCA** installation
2004	1860	1868	38,3%		5,13		roof insulation
2005	1755	1901	37,2%		5,63		ASV installation
2006	1794	1521	49,7%	**18,7%**	3,86		
2007	1468	1747	42,3%	**6,7%**	6,20	205,0	remaining wall insulation
2008	1501	1732	42,8%	**7,5%**	6,02		

* TRV installation in 1996
** HCA – Heat Cost Allocator

CONCLUSION

With insulation of walls and roof we can achieve significant energy saving (15-25%). With the application of a heat cost allocator we are able to reduce the energy usage with another ~15%. The installation of dedicated pressure controllers in the bottom of the risers cause an average of 11% further energy saving on a yearly base. The energy saving due to Δp controller is projecting in case of low outdoor temperature (year 2006). The pay back time of Δp controller installation is acceptable (less than 6 years), to be taken into consideration that this is not a high building, thus one pressure differential controller handles 5 thermostatic radiator valves only.

2.4 Two-pipe heating system in high residential buildings

Type of building	Name of project	Main data	Picture of building
 High building	**Building Society "Osiedle Młodych" Poznań, Poland**	• Address: Tysiąclecia 70 • Number of floors: 16 • Number of staircases: 2 • Number of flats: 128 • Heated space: 19.500 m³ • Number of radiators: 576 • Number of risers: 40	

THE PROJECT

This building was built in 1983 with blocks of flat technology (concrete panels). The modernisation has been done in several steps. In 1995 TRV's and in 1996 heat cost allocators were installed on the radiators. In 1999 the wall became insulated. In 2005 Δp controllers were installed in the bottom of the risers. In the investigated period the outdoor temperature was varying in a wide range therefore the correction of energy usage is very important.

USED DANFOSS EQUIPMENT FOR RENOVATION (IN 1995 AND 2005)

A | Thermostatic radiator valves for each radiator: RTD-N + thermo head RTD
Dimension: DN 10-20 (576 all together)

B | Differential pressure controller pair in the bottom of the riser: ASV-PV + ASV-M
Dimension: DN 15-32 (2, 4, 14, 20 pcs.)

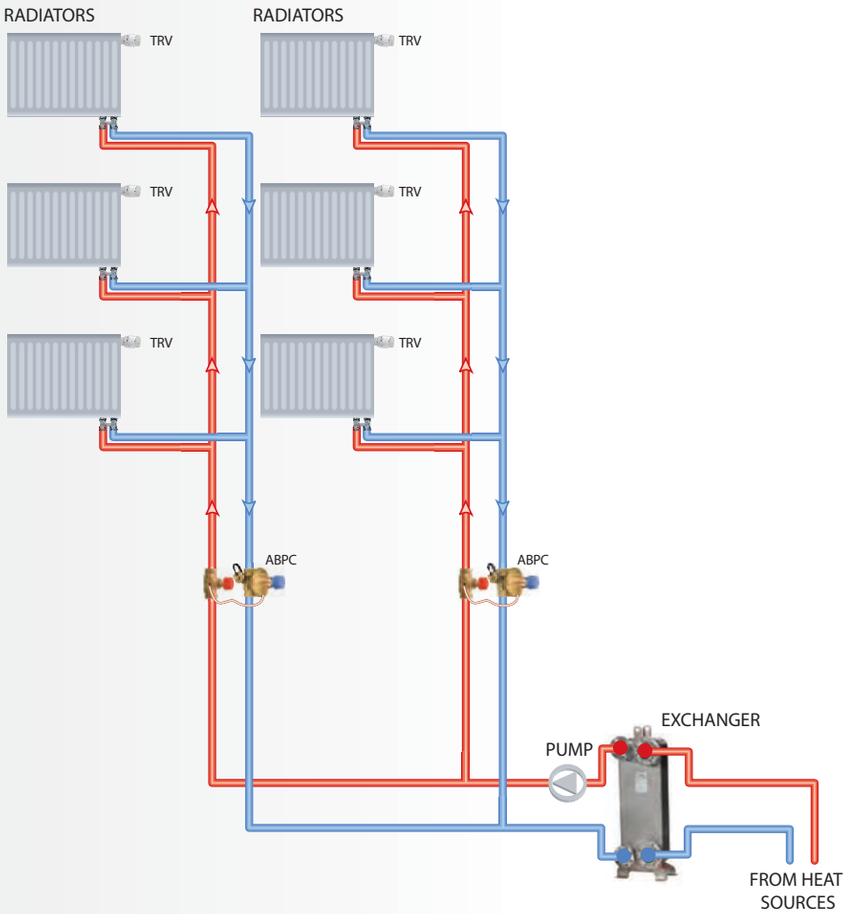

TRV – Thermostatic Radiator Valves
ABPC – Automatic Balancing Pressure Controller

SAVINGS

Investment type	ASV Installation
Investment costs [€]	6631
Av. yearly energy saving [GJ]	740,4
Energy price (DH) [€/GJ]	8,79
Pay back time [year]	**1,0**

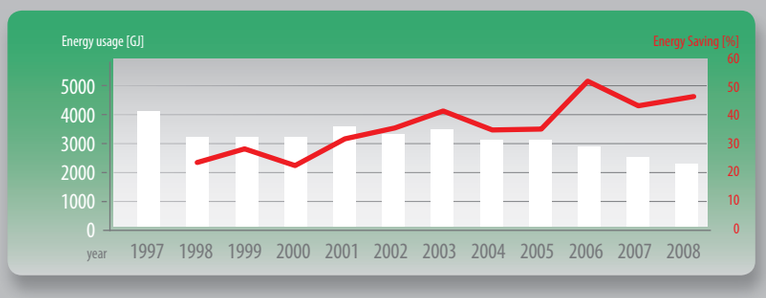

Calculation is based on period 1997 – 2004 compared to 2006-2008

INVESTMENT COSTS

Equipment	Pcs.	Price [€]	Installation costs [€]	Sum
Δp controller into the risers	40	5597	1034	6631

ENERGY USAGE AND ENERGY SAVING OF BUILDING

Year	Energy usage (heating) [GJ]	Corrected energy usage to 5,2°C	Saving in % compared to 1997	Extra saving in % due to automatic balancing (2005)	Average outdoor temp. [°C]	Average yearly energy saving (GJ)	Action
1997	4194	4194			5,2		1995 TRV, 1996 HCA installation
1998	3167	3697	24,5%		6,2		
1999	3358	2999	28,5%		4,4		Insulation of building
2000	3066	3264	22,2%		5,6		-
2001	3607	2873	31,5%		3,5		
2002	3328	2715	35,3%		3,7		-
2003	3488	2486	40,7%		2,5		
2004	3184	2661	36,5%		3,9		
2005	3026	2706	35,5%	**9,8%**	4,4		ASV installation
2006	2863	2075	50,5%	**30,8%**	2,7		
2007	2493	2411	42,5%	**19,6%**	5,0	740,44	
2008	2292	2161	48,5%	**27,9%**	4,8		

CONCLUSION

The installation of dedicated differential pressure controllers in the bottom of the risers result in a 26,3% energy saving on a yearly base. (The installation of ASV-PV valves is shown with a yellow column in above diagram). In the year 2005 when the ASV installation was done the energy saving is half of the average due to the result of installation concerns a half season only. The insulation of the building does not result in perceptible energy saving. (In high buildings only a few flats are affected by this action). The pay back time of a Δp controller installation (1 year) is very good.

2.5 Two-pipe heating system in medium high residential buildings

Type of building	Name of project	Main data	Picture of building
 Medium high rise building	**Building Society "Katowicka" Katowice, Poland**	• Address: Lubuska street 7-9 • Number of floors: 11 • Number of staircases: 2 • Number of flats: 60 • Heated space: 15612 m³ • Number of radiators: 294 • Number of risers: 14	

THE PROJECT

This building was built in 1987 with blocks of flat technology (concrete panel). The modernisation has been done in several steps. In 1996 TRV's and heat cost allocators were implemented (in that time the manual balancing remained original). In 2000 the sub-station was renovated (pressure controller). In 2002 the building was established with automatic balancing valves in the bottom of the risers (Δp controller). In 2005 the block sub-station was separated to a dedicated sub-sub-station for each building.

USED DANFOSS EQUIPMENT FOR RENOVATION (IN 1996 AND 2002)

A | Thermostatic radiator valves for each radiator: RTD-N + thermo head RTD
Dimension: DN 15

B | Differential pressure controller pair in the bottom of the riser: ASV-PV + ASV-M
Dimension: DN 15-32 (4, 3, 4, 3 pcs.)

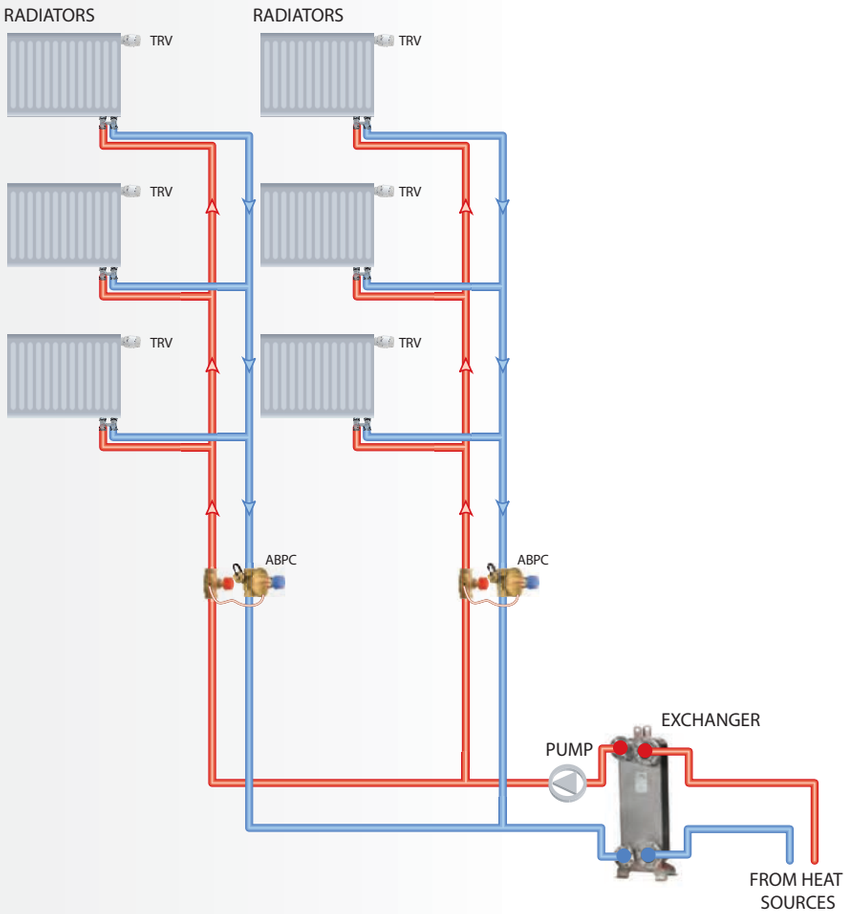

TRV – Thermostatic Radiator Valves
ABPC – Automatic Balancing Pressure Controller

SAVINGS

Investment type	only TRV	ABV in S.St.**	ASV-P/M	Sum
Investment costs [€]	4816	1085	2410	7226
Av. yearly energy saving [GJ]	365,7	476,5	97,6	795,5
Energy price (DH) [€/GJ]*	6,49	6,49	6,49	6,49
Pay back time [year]	**2,0**	**0,4**	**3,8**	**1,4**

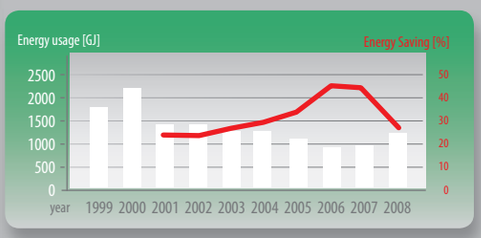

* This price is based on local DH company price
** S.St. – Sub Station

INVESTMENT COSTS

Equipment	Pcs.	Price [€]	Installation costs [€]	Sum
Radiator valves (RTD)	294	2964	1117	4081
Heat cost allocator	294	735	0	735
Central Δp controller	1	685	400	1085
Δp controller into the risers (ASV-PV, ASV-M)	14	1892	518	2410

ENERGY USAGE AND ENERGY SAVING OF BUILDING

Year	Energy usage (heating) [GJ]	Corrected energy usage to 2,4°C	Saving in % compared to 1995	Saving in % due to automatic balancing valve comp. to 1999	Extra saving in % due to automatic balancing (2002)	Average outdoor temp. [°C]	Energy saving in GJ comp. to previous period*	Action
1995	2084					2,4		
1996	2006	1945	6,7%			2,1		TRV, HCA installation
1997	1741	1878	9,9%			3,1		
1998	1760	1837	11,9%			2,8	365,7	
1999	1537	1757	15,7%			3,6		
2000	1505	2247	-7,8%			5,6		Δp contr. in sub-station
2001	1167	1347	35,4%	23,3%		3,7	476,5	
2002	1161	1348	35,3%	23,3%		3,7		ASV installation
2003	1275	1259	39,6%	28,3%	**6,6%**	2,3	**97,6**	
2004	1068	1240	40,5%	29,4%	**8,0%**	3,7		
2005	978	1126	46,0%	35,9%	**16,5%**	3,7		Sub-station separation
2006	960	945	54,6%	46,2%		2,3		
2007	676	980	53,0%	44,2%		5,4		
2008	853	1248	40,1%	28,9%		5,4		

CONCLUSION

The energy saving potential is huge in these type of buildings. With TRV we can reduce the energy usage with more than 10%. In case of Δp controller in the building we can save another 23% of energy! With dedicated differential pressure controller in the bottom of the riser we can save an additional 6-8% of energy. (If the Δp controller had not been installed into the sub-station the saving would have appeared here like in previous cases). All together – because of the Δp controllers the total saving is close to 30%. The pay back time in this project was very low (less than two years), because of the automatic balancing in the risers.

2.6 Two-pipe heating system in similar residential buildings

Type of building	Name of project	Main data	Picture of building
 Two – same size and location – building comparison before and after renovation	**Building Society NAZORA street Tuluza, Bosnia**	• Address: Nazora 6 and 12 • Number of floors: 5 • Number of flats: 15 • Heated space: 1971 m³ • Number of radiators: 50 • Number of risers: 13	

THE PROJECT

This building was built in 1962 with traditional building technology (brick walls). The modernisation has been done in the summer of 2005. During that time one of the buildings (V.Nazora 12) was equipped with TRV's, heat cost allocators and automatic balancing valves. The other building (V.Nazora 6) was renovated in the same way, but only with manual balancing in the bottom of the risers. The insulation of the buildings was not renovated, the wooden windows and doors are still original. The heat source of the buildings is district heating.

USED DANFOSS EQUIPMENT FOR RENOVATION (IN 2005)

A | Thermostatic radiator valves for each radiator: RA-N + thermo head RAE
Dimension: DN 15 (50 pcs.)

B | Differential pressure controller pair in the bottom of the riser: ASV-P + ASV-M
Dimension: DN 15-20 (5, 8 pcs.)

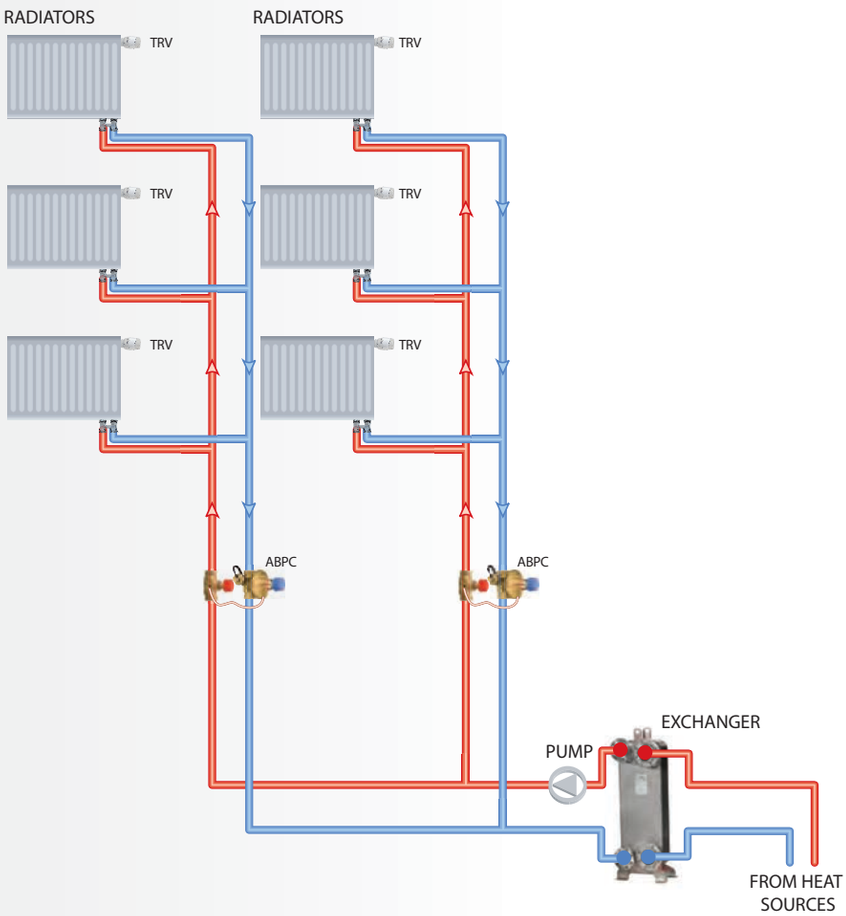

TRV – Thermostatic Radiator Valves
ABPC – Automatic Balancing Pressure Controller

SAVINGS

Investment type	ASV-P/M
Investment costs [€]	616
Av. yearly energy saving [GJ]	23,9
Energy price (DH) [€/GJ]	3,38
Pay back time [year]	**4,0**

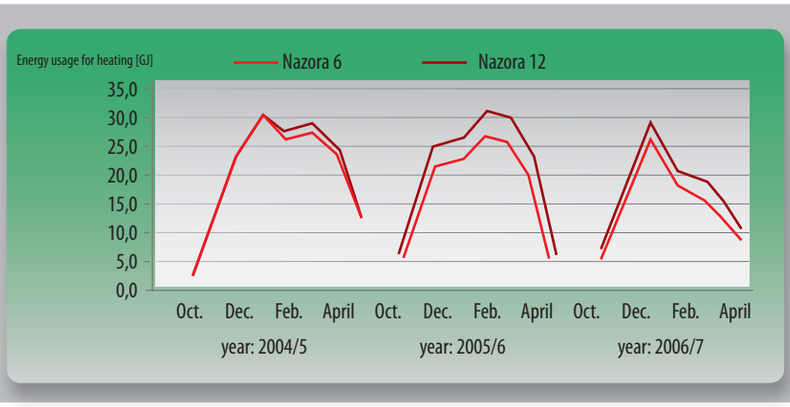

The investment costs difference between buildings: 1665-1049=616 EUR (based on price difference of balancing.)

INVESTMENT COSTS

Equipment	Pcs.	Price [€]	Installation costs [€]	Sum	Remark
Δp controller into the risers	13	1103	562	1662	Nazora 12
Manual balancing	13	487	562	1049	Nazora 6
Radiator valves	50	404	190	594	In both buildings
Heat cost allocator	50	125	0	125	In both buildings

ENERGY USAGE AND ENERGY SAVING OF BUILDING

	Energy usage (heating) [GJ]			Energy usage (heating) [GJ]		
Building	V. Nazora 6.			V. Nazora 12.		
Month/Year	2004/2005	2005/2006	2006/2007	2004/2005	2005/2006	2006/2007
October	2,7	7,7	7,1	2,5	6,0	5,2
November	22,6	24,9	18,4	22,6	21,0	14,2
December	30,3	26,5	29,5	30,8	23,2	24,4
January	27,3	31,3	20,6	29,5	27,2	16,9
February	29,0	30,0	18,7	30,7	25,7	14,4
March	23,5	23,1	15,6	24,2	18,9	11,9
April	12,0	7,2	10,2	12,3	6,2	7,8
Sum	147,4	150,7	120,1	152,5	128,2	94,8
Energy saving compared to V. Nazora 6.				-3,3%	17,5%	26,7%

CONCLUSION

The energy saving potential is significant. With a heating system renovation (TRV+ABV) only we can reduce the energy usage around 20-30%. (With insulation and renovation of the windows further savings can be achieved). Very well visible on the above graph is that the original higher energy consumption of the building (brown line) is much lower than the building which wasn't renovated (red line). The pay back time of the investment is acceptable. Including the total heating renovation expenses, the pay back time is four years.

IT IS WORTH CONSIDERING MAKING THE INVESTMENT! The pay back time is in this case not outstanding, but good enough. We have to take into consideration the relatively low energy price, but also the increasing comfort.

3.1 One-pipe heating system in special shaped medium high buildings

Type of building	Name of project	Main data	Picture of building
 Low building	**Wohnungsgesellschaft der Stadt Deelitzsch, Germany**	• Address: str. Sonnenwinkelweg 2-8 • Number of floors: 5 • Number of flats: 40 • Heated space: 6 840 m³ • Number of radiators: 180 • Number of risers: 36	

THE PROJECT

The building was built in 1982 with concrete panel technology. The heat systems used in this building was a typical one pipe system with by--pass for flow control – as riser controller – only manual shut off valves were used. In 1992 the heating system was redesigned manual shut off valves were replaced for thermostatic radiator valves (RA-D type). In the same time heat cost allocators were implemented on each radiator, which allowed introducing individual energy consumption calculation. In 1995 a next step in thermo modernisation process was done: wall isolation and replacement of the windows. In 2006 the one pipe heating system was renovated again concerning the water distribution. This time automatic flow limiters (AB-QM) with thermal actuators (TWA) and thermostats on the pipe (AT-type) were installed in risers – for proper water balancing. In the same time a similar building, which is located near to the original project building, was left without riser balancing. So we could compare the energy efficiency of the renovated building. This type of solution allows controlling the return temperature. During a partly loaded condition, when some of the radiators are closed, the return temperature is increasing. This results in hot water that is circulating unnecessary in the system.

USED DANFOSS EQUIPMENT FOR RENOVATION (IN 1992 AND 2006)

A | Thermostatic valves RA-D
Dimension: DN 10-20 (180 pcs.)

B | Automatic flow limiter AB-QM
with TWA actuators
Dimension: DN 15 (36 pcs.)
and AT thermostat elements.

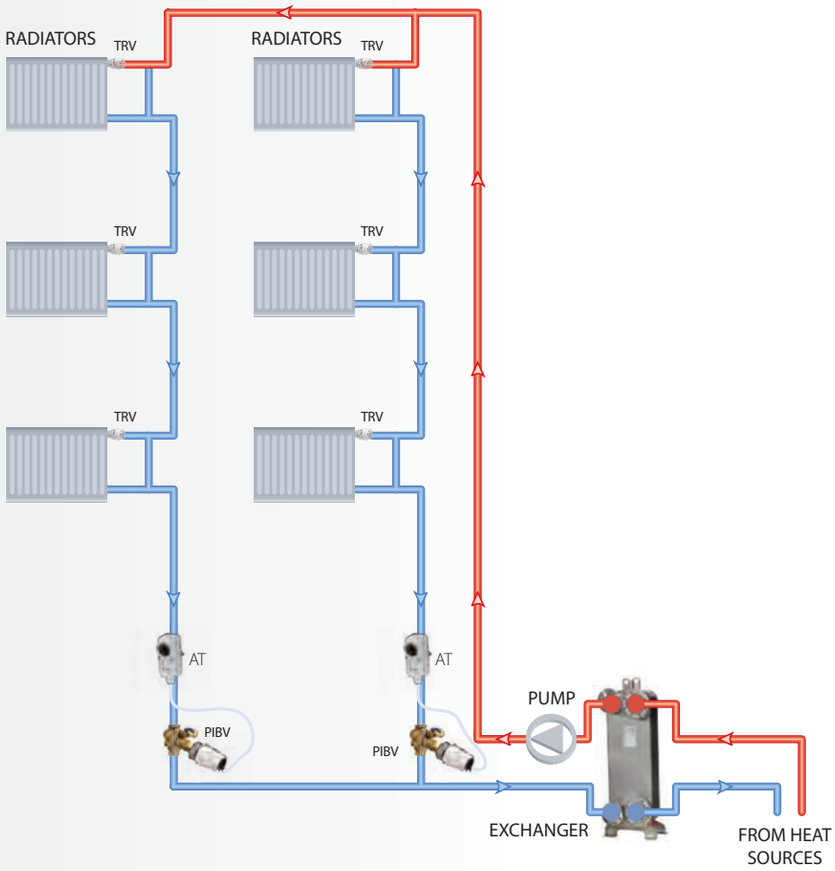

TRV – Thermostatic Radiator Valves
PIBV – Pressure Independent Balancing Valves (as flow limiter)
AT – Pipe Thermostat

SAVINGS

Investment type	AB-QM (AT +TWA)
Investment costs [€]	6144
Av. yearly energy saving [GJ]	235
Energy price (DH) [€/GJ]	8
Pay back time [year]	**3,3**

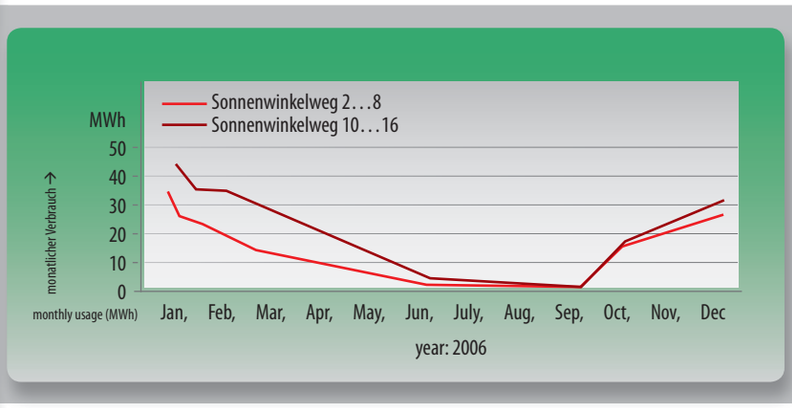

INVESTMENT COSTS

Equipment	Pcs.	Price [€]	Installation costs [€]	Sum
AB-QM (TWA+AT)	36	5500	644	6144

ENERGY USAGE AND ENERGY SAVING OF BUILDING

	Energy used in MWh		
	2006	2007	2008
Building 5 with AB-QM and AT str. Sonnenwinkelweg 2-8, Sachsen	171	132	124
Building 6 without str. Sonnenwinkelweg 10-16 , Sachsen	211	213	199
difference in MWh	40	81	75
Average yearly energy saving [GJ]	235		

CONCLUSION

A new concept of one pipe regulation, based on return temperature control, brings an additional 20% saving during one heating operation session. It is very important to note that one pipe heating systems, when used with a by-pass on the radiators, that this automatically means that the radiator thermostat can only close the flow through the radiators. But when the TRV's are closed the water can still circulate through the by-pass at all times. This provides a situation where the return temperature in the bottom of the risers will increase. A thermostat detects a higher return temperature, what allows reducing the flow. (This is not necessary when TRV's are closed). This type of solution makes a one pipe system a very efficient and variable flow system. In the above graph we can see the monthly used energy comparison between the two buildings.

3.2 One-pipe heating system in special shaped medium high residential buildings

Type of building	Name of project	Main data	Picture of building
Medium high rise building	**Building Society "Dąb" Szczecin, Poland**	• Address: str. 26 Kwietnia Three similar buildings Each of buildings have: Number of floors: 9 Number of staircases: 5 Number of flats: 180 Heated space: 31660 m³ Number of radiators:790 Number of risers: 97	

THE PROJECT

The buildings was built in 1976 as a so called "Leningrad Building" consisting of concrete panels. The design and all the building elements were prepared in St. Petersburg in Russia. The heating system design, a traditional one pipe system, originally used a three way valve with a shut-off function only. The radiators are cast-iron types. The heat supply of the building comes from a big sub-station which is located about 100 meters from the building and also supplies two other buildings. Renovation was started in 1994-95 with thermostatic radiator valves installation (Danfoss, RTD-D, type) and sub-station renovation (weather compensator, control valves and DP controller were installed). Due to lack of money for hydraulic balance was done based on traditional manual method with measuring orifices. In 1996-97 heat cost allocators were installed which allow measuring individual energy consumption. The next step of renovation was done in 2002-2003: wall isolation (10cm of polystyrene) and new windows. Due to still relatively high energy consumption (compared to a traditional two-pipe system) in 2009 the Building Society was considering to change the heating system to a two-pipe system or use automatic, adjustable flow limiters on the risers with self action thermostats (Danfoss solution: AB-QM + QT). Investment for the second solution was five times less expensive!

USED DANFOSS EQUIPMENT FOR RENOVATION

A | In 1994-95 : Danfoss radiator thermostat were installed DN 15-20 mm (483, 307 pcs. in each building), type RTD-D

B | in 2009 : Danfoss automatic flow limiters with self action thermostat used in risers: AB-QM with QT Dimension: DN 15-20 (57,40 pcs. in each building)

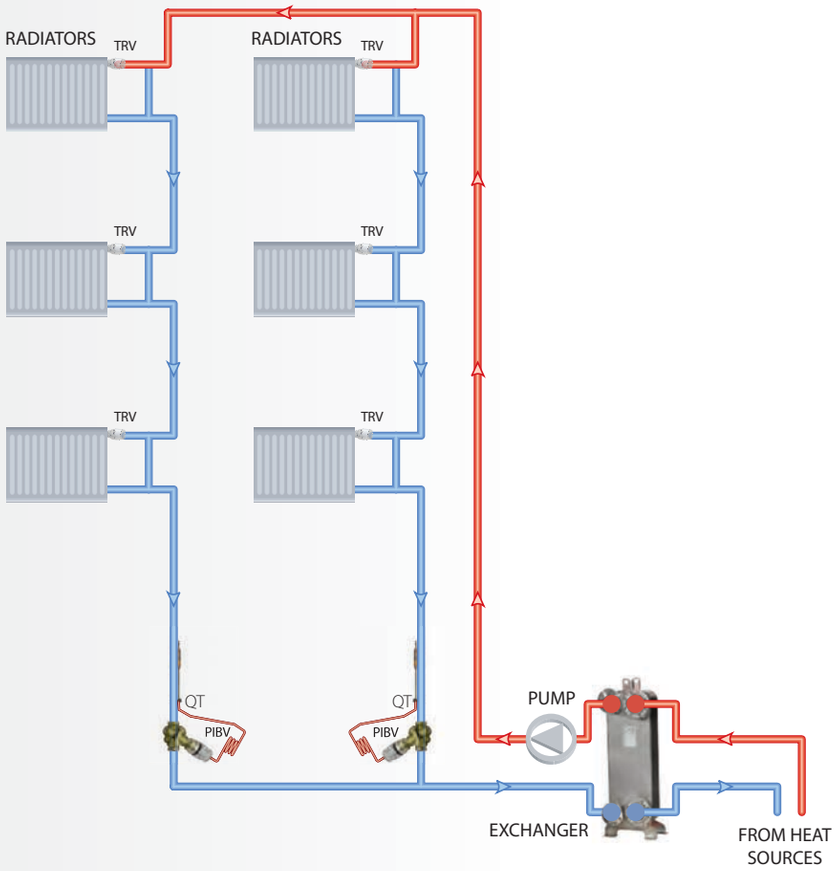

TRV – Thermostatic Radiator Valves
PIBV – Pressure Independent Balancing Valves (as flow limiter)
QT – Self Acting Thermostat

SAVINGS

Investment type	AB-QM + QT
Investment costs [€]	32201
Av. energy saving from three heating seasons [GJ]	1283
Energy price (DH) [€/GJ]*	9,7
Pay back time [year]	**2,6**

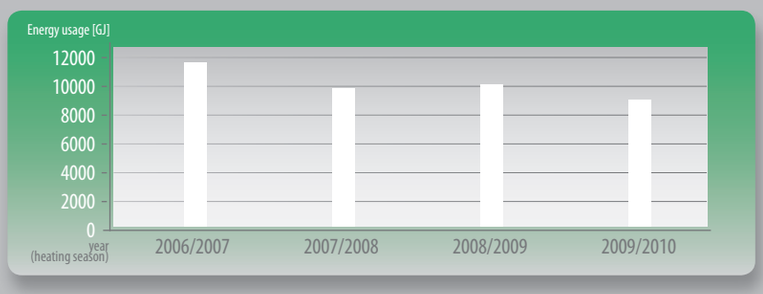

* as AB-QM and QT were installed in December 2009.

INVESTMENT COSTS

Equipment	Pcs.	Price [€]	Installation costs [€]	Sum
Automatic flow limiters with self acting thermostat (AB-QM + QT)	291 (91x3)	27063	5238	32201

ENERGY USAGE AND ENERGY SAVING OF BUILDING

Year (heating season)	Energy used in heating season (GJ)	Corrected energy used (degree-day method) (GJ)	Average outddor temperature in heating season (C)	Average energy saving from three heating season in GJ	Action
2006/2007	11355,4	11615,8	6,1		
2007/2008	10403,5	9697,0	3,9		
2008/2009	10795,5	10000,8	3,3		
2009/2010	9876,6	9154,8	2,2	1283	AB-QM + QT installation

CONCLUSION

This new solution, that controls the flow in the riser depending on the temperature in the pipe, converts a one-pipe system (constant flow system) into a variable flow system. Unnecessary water flow (when TRV's are closed) is reduced to a minimum by self action balancing valves, which were installed in each riser. In spite of AB-QM + QT (thermostat operation) it should be mentioned that AB-QM ensures a proper balance between risers. This is a huge benefit (proved by this case) that due to a correct balance system, there were no complaints about cold risers during a very strong winter period 2009-10! The proposed solution by Danfoss for one pipe heating system based on automatic flow limiters with self action thermostats (AB-QM + QT) should be recommended for all regions and countries where the energy costs are high as it allows achieving huge energy consumption reductions with high indoor quality comfort! Short pay back time (less than 3 years) which was confirmed by this case is excellent evidence for this proper solution offered by Danfoss.

3.3 One-pipe heating system in special shaped medium high buildings

Type of building	Name of project	Main data	Picture of building
 Medium high rise building	**Building Society "VIZAFAGÓ 19" Budapest, Hungary**	• Address: Nepfürdő u. 19 • Number of floors: 10 • Number of staircases: 6 • Number of flats: 260 • Heated space: 40.892 m³ • Number of radiators: 1040 • Number of risers: 128	

THE PROJECT

This building was built in 1978 with blocks of flat technology (concrete panels). The heating system is a relatively modern one pipe system – equipped with by-pass – and manual control valves are in front of the radiators. The water distribution is equipped with manual balancing valves originally. The modernisation had not been completed yet. Only the renovation of water distribution was inevitable because of many claims. This renovation was finished in 2002 during the summer maintenance period.

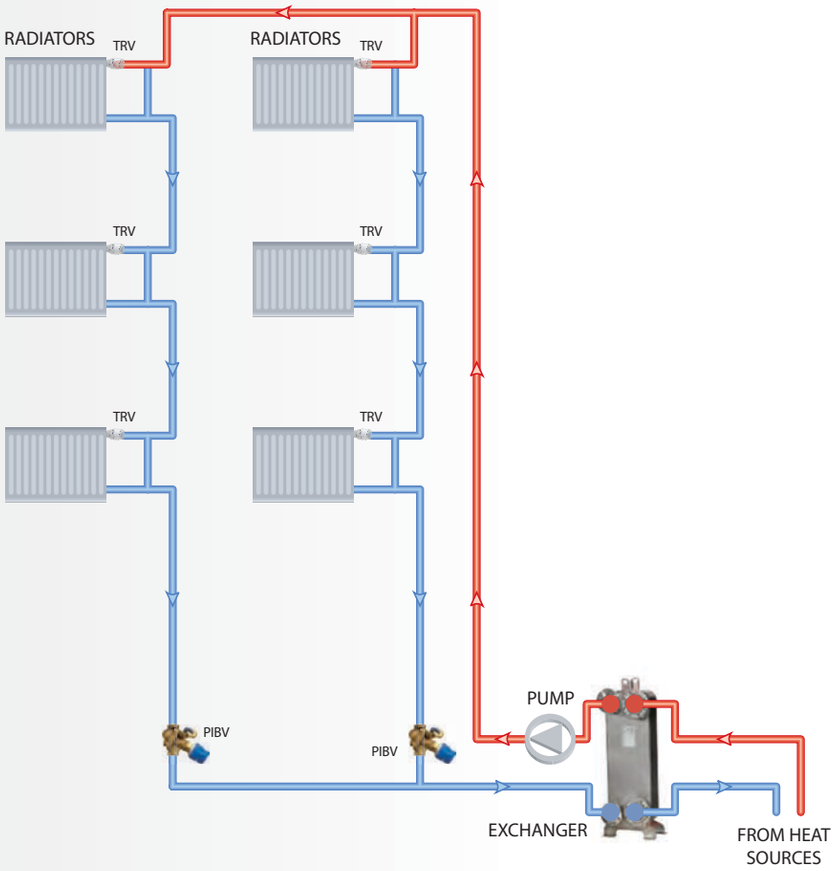

USED DANFOSS EQUIPMENT FOR RENOVATION (IN 2002)

ASV-Q flow limiter (predecessor of AB-QM) was installed in all bottom of risers
Dimension: DN 15-25 (26, 68, 34 pcs.)

PREVIOUS SOLUTION

CURRENT SOLUTION

TRV – Thermostatic Radiator Valves
PIBV – Pressure Independent Balancing Valves (as flow limiter)

SAVINGS

Investment type	ASV-Q
Investment costs [€]	15030
Av. yearly energy saving [GJ]	1491,5
Energy price (DH) [€/GJ]*	11,99
Pay back time [year]	**0,8**

* This price is based on local DH company price

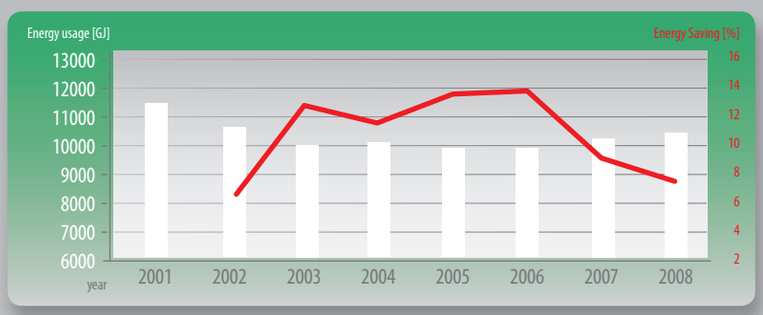

INVESTMENT COSTS

Equipment	Pcs.	Price [€]	Installation costs [€]	Sum
Flow limiter	128	13173	1857	15030

ENERGY USAGE AND ENERGY SAVING OF BUILDING

Year	Energy usage (heating) [GJ]	Corrected energy usage to 3,59°C	Saving in % compared to 2001	Average outdoor temp. [°C]	Average yearly energy saving (GJ)	Action
2001	11486	11486		3,6		
2002	9197	10713	6,7%	4,8		Flow limiter installation in the bottom of riser
2003	11395	10056	**12,5%**	2,5	1491,53	
2004	9624	10117	**11,9%**	4,0		
2005	10104	9915	**13,7%**	3,4		
2006	9619	9889	**13,9%**	3,8		
2007	8832	10418	**9,3%**	4,9		New sub-station
2008	9180	10590	**7,8%**	4,7		

CONCLUSION

The year of investment is very well visible in the figures above. In 2002 the energy saving is approximately half of the coming years because of the fact that the installation was done in the summer so the energy savings concern half a season only. The energy savings decreased a bit after 2007, due to the implementation of a new individual sub-station for the building. From this year on it was possible to increase the flow temperature to reduce the under heating on the first floors. With individual flow limiters in the bottom of the risers the water deviation became excellent and we could save ~11-13% of energy. The new sub-station helped to increase the level of comfort of flat owners.

4.1 Domestic hot water system in long residential buildings

Type of building	Name of project	Main data	Picture of building
 Long building	**Building Society "Wspólny Dom" Szczecin, Poland**	• Address: Zakole 27-36, Szczecin, Poland • Number of floors: 5 • Number of staircases: 10 • Number of flats: 73 • Number of risers: 40	

THE PROJECT

The renovation of this building started in 1996 with a TRV installation. After that – in several steps – the domestic hot water system reconstruction was realised in 2006. The tendency of the energy saving (in %) is well visible. Originally the water distribution with circulation risers was solved with manual balancing valves, therefore overflow and high return temperature was typical in the system. After renovation the circulation became temperature controlled and energy saving.

USED DANFOSS EQUIPMENT FOR RENOVATION (IN 2006)

A | MTCV return temperature limiter basic version was installed in the bottom of all DHW circulation risers
Dimension: DN 20 (40 pcs.)

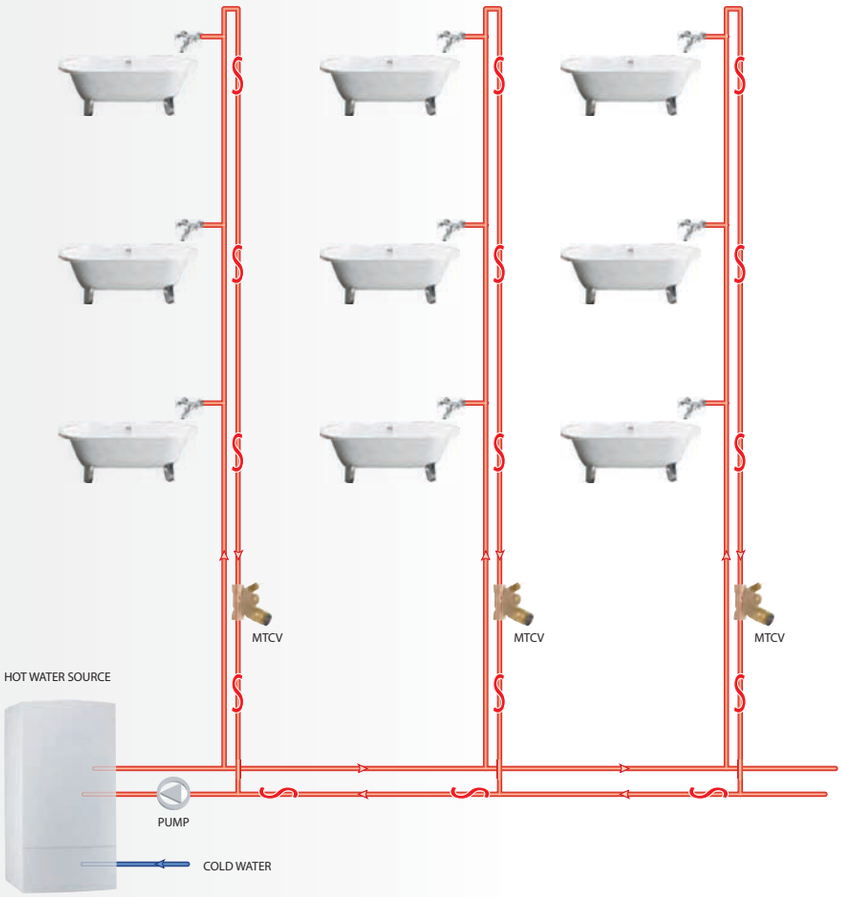

MTCV – Multifunctional Temperature Control Valve

SAVINGS

Investment type	MTCV
Investment costs [€]	2353
Av. yearly energy saving [GJ]	430,1
Energy price (DH) [€/GJ]*	13,20
Pay back time [year]	**0,41**

* This price is based on local DH company price

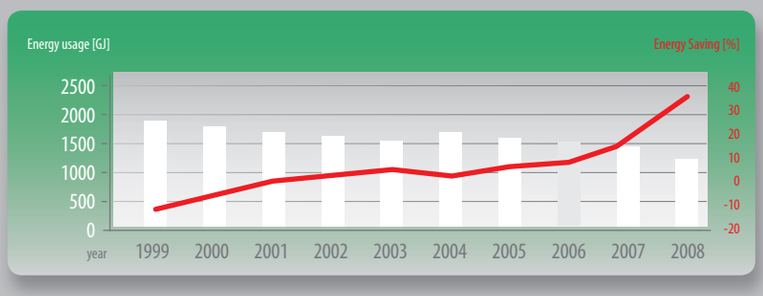

INVESTMENT COSTS

Equipment	Pcs.	Price [€]	Installation costs [€]	Sum
MTCV valve into the circulation riser	40	2167	187	2353

ENERGY USAGE AND ENERGY SAVING OF BUILDING

Year	Energy usage [GJ]	Saving in % compared to average of 1999-2005	Average yearly energy saving (GJ)	Action
1999	1920	-11,9%		More and more owners built in individual water meter
2000	1841	-7,3%		
2001	1728	-0,7%		
2002	1658	3,4%		
2003	1596	7,0%		
2004	1665	3,0%		
2005	1603	6,6%		
2006	1566	8,7%		MTCV installation
2007	1436,8	16,3%	430,1	
2008	1134,4	33,9%		

CONCLUSION

In the first years (1999-2003) the energy usage decreased continuously due to the fact that more and more owners built in an individual water meter in their own flat. The energy saving had started. The energy usage became stable in the period of 2004-2006. The installation of the MTCV return temperature limiter is well visible, the energy saving increased immediately after the installation. After one year of experience (2007) the set value of return temperature was reduced for further energy savings. Energy saving has increased from 16% to 34%.

4.2 Domestic hot water system in medium long residential buildings

Type of building	Name of project	Main data	Picture of building
 Long building	**Building Society "Osiedle Młodych" Poznań, Poland**	• Address: Tysiaclecia 16-42, 26-29, 33-42 • Number of floors: 5 • Number of staircases: 10 • Number of building: 3 • Number of risers: 60	

THE PROJECT

The renovation of this building started in 1994 with a TRV installation. After installation of TRV and heat cost allocators, the domestic hot water system reconstruction was realised in 2003. Originally the water distribution among circulation risers was solved with manual balancing valves therefore overflow and high return temperature was typical in the system. After renovation the circulation became temperature controlled. The elapsed time clearly shows us the energy saving due to renovation.

USED DANFOSS EQUIPMENT FOR RENOVATION (IN 2003)

A | MTCV return temperature limiter basic version was installed in all bottom of DHW circulation risers
Dimension: DN 20 (60 pcs.)

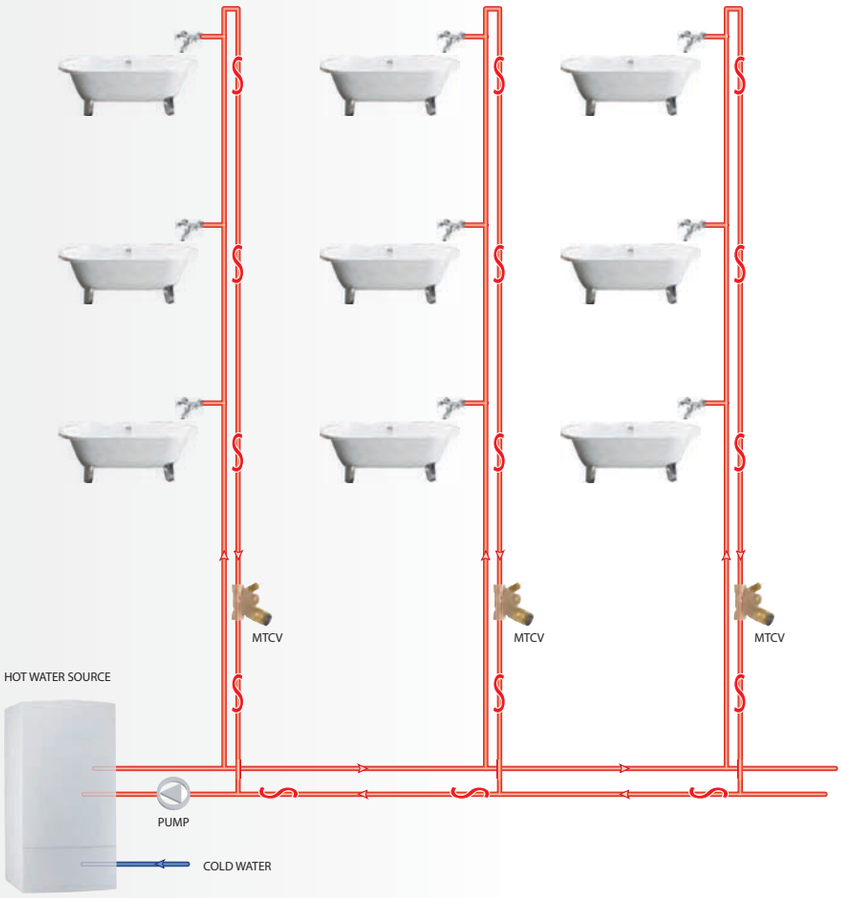

MTCV – Multifunctional Temperature Control Valve

SAVINGS

Investment type	MTCV
Investment costs [€]	4475
Av. yearly energy saving [GJ]	920,3
Energy price (DH) [€/GJ]	7,77
Pay back time [year]	**0,63**

Calculation: period 1998-2002 compared to period 2003

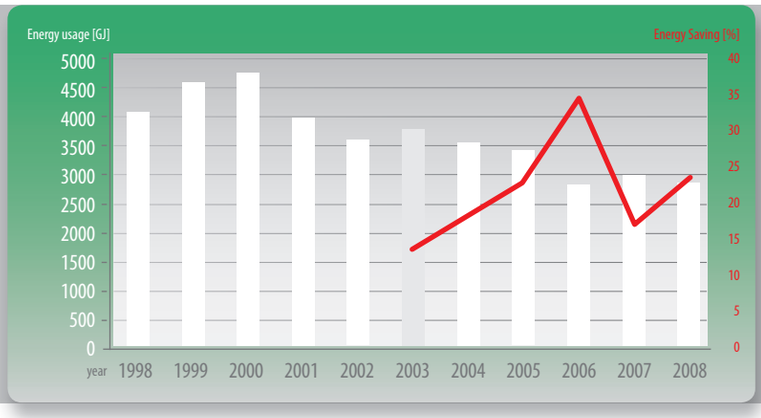

INVESTMENT COSTS

Equipment	Pcs.	Price [€]	Installation costs [€]	Sum
MTCV valve into the circulation riser	60	3251	1224	4475

ENERGY USAGE AND ENERGY SAVING OF BUILDING

Year	Energy usage [GJ]	Saving in % compared to average of 1998-2002	Average yearly energy savisg (GJ)	Action
1998	4142			
1999	4607			
2000	4689			
2001	3979			
2002	3593			
2003	3788	13,0%		MTCV installation
2004	3554	18,4%	920,3	
2005	3342	23,2%		
2006	2833	34,9%		
2007	3456	20,6%		
2008	3223	26,0%		

CONCLUSION

In the first years (1998-2000) the energy usage increased than decreased continuously due to the fact that more and more owners built in an individual water meter in their own flat. The energy saving had started. The energy usage more or less stabilised in the period of 2002-2003. The installation of the MTCV return temperature limiter is well visible, the energy saving increased immediately after the installation. After two years of experience (2006) the set value of return temperature was reduced for further energy savings. Energy saving has increased from 18% to 35%.

4.3 Domestic hot water system in high residential buildings

Type of building	Name of project	Main data	Picture of building
 High building	**Building Society "Osiedle Młodych" Poznań, Poland**	• Address: Tysiąclecia 70 • Number of floors: 16 • Number of staircases: 2 • Number of flats: 128 • Number of risers: 15	

THE PROJECT

In 1994 the building was renovated with a TRV installation. After that – in several steps – the domestic hot water system reconstruction was realised in 2003. Originally the water distribution among circulation risers was solved with manual balancing valves therefore overflow and high return temperature was typical in the system. After renovation the circulation became temperature controlled. The elapsed time clearly shows us the energy saving due to renovation.

USED DANFOSS EQUIPMENT FOR RENOVATION (IN 2003)

A | MTCV return temperature limiter basic version was installed in all bottom of DHW circulation risers
Dimension: DN 20 (15 pcs.)

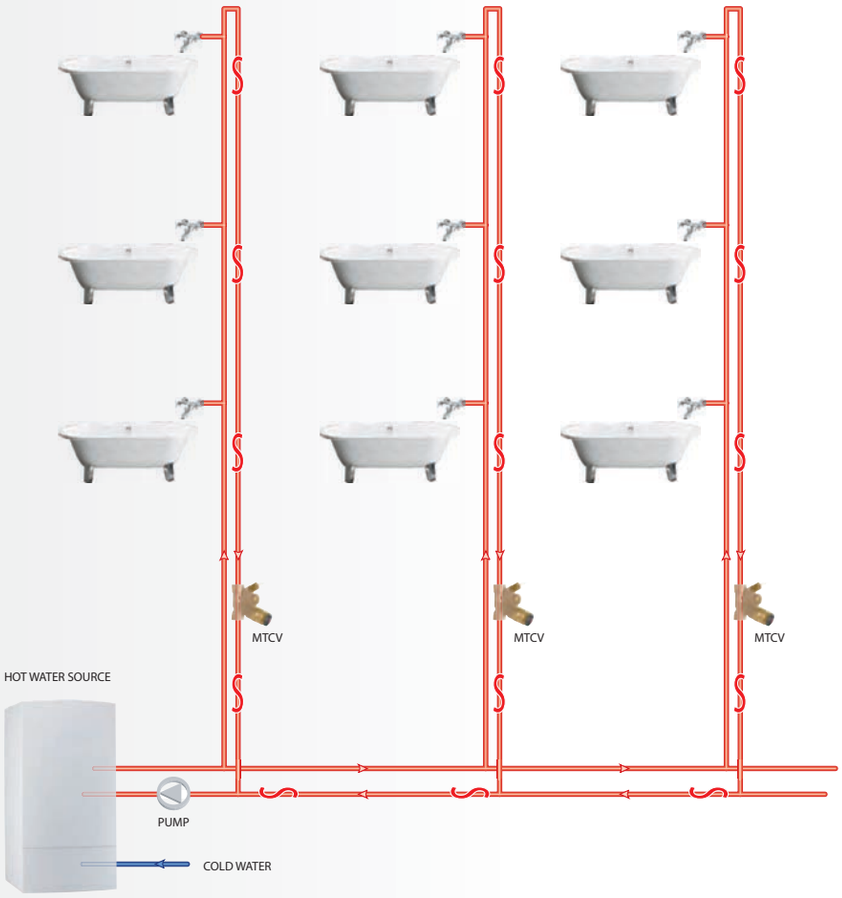

MTCV – Multifunctional Temperature Control Valve

SAVINGS

Investment type	MTCV
Investment costs [€]	1119
Av. yearly energy saving [GJ]	292,4
Energy price (DH) [€/GJ]	8,79
Pay back time [year]	**0,44**

Calculation: period 1998-2002 compared to period 2004-2008

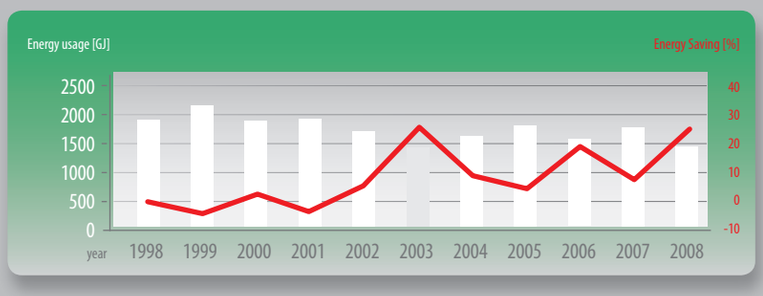

INVESTMENT COSTS

Equipment	Pcs.	Price [€]	Installation costs [€]	Sum
MTCV valve into the circulation riser	15	813	306	1119

ENERGY USAGE AND ENERGY SAVING OF BUILDING

Year	Energy usage for DHW [GJ]	Saving in % compared to average of 1998-2002	Average yearly energy saving (GJ)	Action
1998	1915	-0,3%		
1999	2035	-6,6%		
2000	1855	2,8%		
2001	1956	-2,4%		
2002	1785	6,5%		
2003	1416	25,8%		MTCV installation
2004	1722	9,8%	292,4	
2005	1809	5,3%		
2006	1568	17,9%		
2007	1746	8,6%		
2008	1440	24,6%		

CONCLUSION

In the years (1998-2002) the energy usage was varying in a narrow range, but we can see that the average consumption was on a high level. The year of the installation of the MTCV return temperature limiter is well visible (2003). The energy saving has increased suddenly. From this year on the energy usage is still fluctuating (most probably based on hot water usage behaviour) but on a significantly lower level. The average yearly energy saving is not visible but close to a 300 GJ.

In these types of high buildings where the distribution pipeline is not very long, the energy saving potential is smaller (although this effect is compensated by lenght of vertical pipeline) but in the same time the investment costs are limited. All in all we achieved a pay back time of less than 6 months. This is an excellent achievement!

5.1 Cooling system comparison in special shaped office buildings

Type of building	Name of project	Main data	Picture of building
special shaped office building	**Office center "V Parku" Prague, Czech Republic**	• Address: Prague-Chodov, • Number of terminal units: 305 • Heated space: 31376 m³ • Number of floors: 4 • Type of balancing: *Building* 1): Manual balancing and MCV at TU *Building* 2): PIBCV at all TU	

THE PROJECT

The Office Park project started in 2004. The first six buildings were built with traditional constant flow heating/cooling system technology. This means that the fan-coils are controlled by a 3-way motorised control valve with ON/OFF control and the AHUs 0-10V modulation control. The water deviation was ensured with manual balancing valves. The system commissioning has been done by an independent company. In 2007 Danfoss offered new PIBCV technology and the investor had made the decision that the remaining 12 buildings were equipped with AB-QM valves. The energy efficiency of different heating/cooling systems can be compared easily, because the physical conditions and the usage of the buildings are similar.

USED DANFOSS EQUIPMENT FOR RENOVATION (IN 2007)

A | AB-QM pressure independent balancing motorised flow limiter for fan-coils
Dimension: DN 15-25 (300 pcs.)

B | AB-QM pressure independent balancing control valve for air handling units
Dimension: DN 40-65 (5 pcs.)

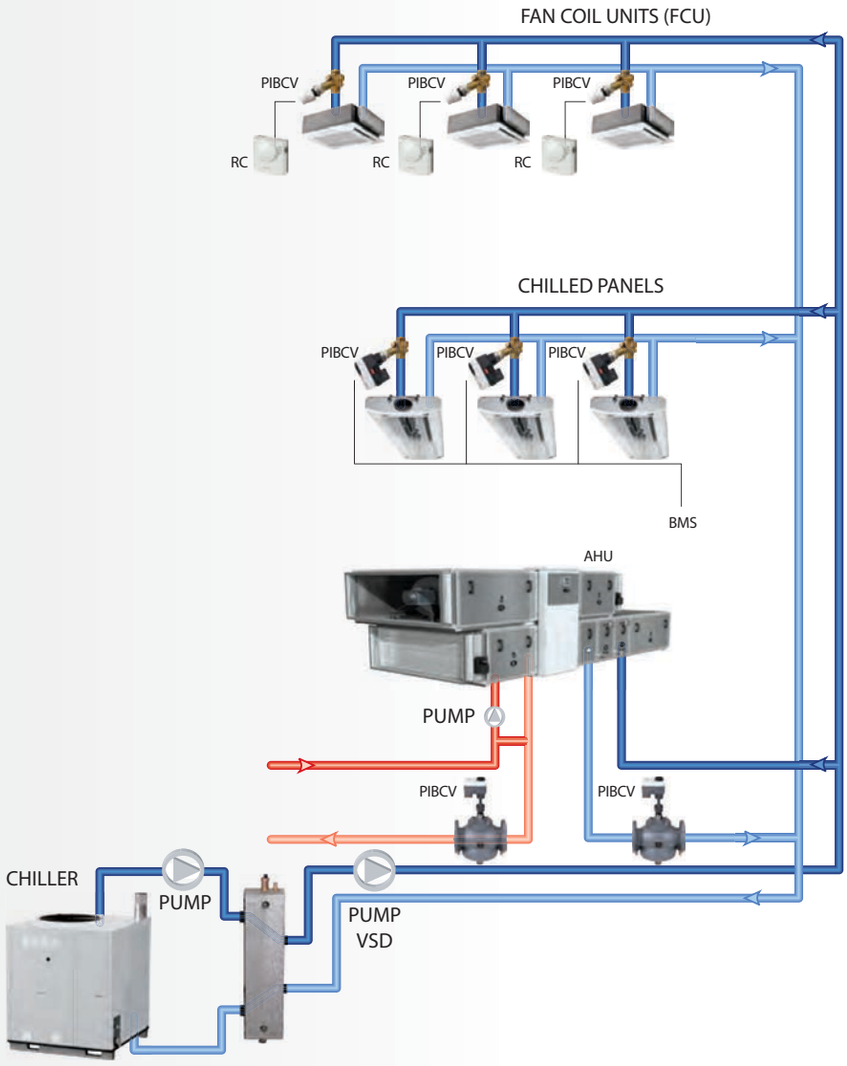

PIBCV – Pressure Independent Balancing Control Valves
RC – Room Controller
BMS – Building Management System
VSD – Variable Speed Drive

SAVINGS

Investment type	Traditional	AB-QM renovation	AB-QM investment
Investment costs [€]	24582	27937	3355
Av. yearly energy saving [GJ]	-	48924	48924
Energy price (DH) [€/GJ]	9,12	9,12	9,12
Pay back time [year]		**5,2**	**0,6**

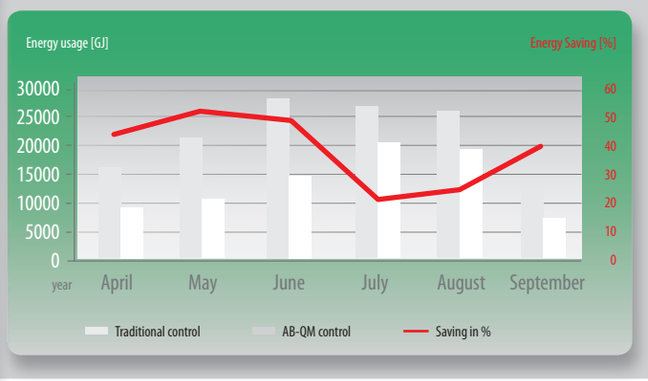

* This price is based on local DH company price

INVESTMENT COSTS

Equipment	Pcs.	Price [€]	Installation costs [€]	Sum
Traditional control in front of terminal units and MBV	305	22292	2290	24582
AB-QM in front of terminal	305	26372	1565	27937

USAGE AND ENERGY SAVING OF BUILDING IN 2007 SUMMER

Year 2007	Energy usage (cooling) with traditional control [GJ]	Energy usage (cooling) with AB-QM control [GJ]	Saving in %
April	16 585	9 487	42,8%
May	21 569	10 424	51,7%
June	28 353	14 526	48,8%
July	26 009	20 366	21,7%
August	25 396	19 191	24,4%
September	12 607	7 601	39,7%
Sum	**130 519**	**81 595**	**38,2%**

CONCLUSION

The figures above show that with the usage of AB-QM flow limiters/controllers we can save close to 40% of energy on an average level compared to a traditional constant flow system. From an investment point of view the installation costs difference between a traditional and an AB-QM system is insignificant (13%), the pay back time is 0,6 year. In case of renovation with the replacement of the original valves we can't expect such good pay back time.

The pay back time in this project is 5,2 years. Particularly if we take into consideration the better comfort with AB-QM valves. This is a good investment.

5.2 Cooling and heating system in medium high office building

Type of building	Name of project	Main data	Picture of building
special shaped medium high building	**Office center "Bakats Center" Budapest, Hungary**	• Address: Ráday u. 51 • Type of system: four pipe heating / cooling system • Number of terminal units: 112 pcs., 56 pcs. in heating and 56 pcs. cooling • Heated/cooled space: 4310 m³ • Number of floors: 7 • Type of balancing: *Originally*: Manual balancing and zone valve at FC *Reconstruction*: PIBCV at FC	

THE PROJECT

The Office building was built in 2002. The heating-cooling system is a four pipe variable flow system. The terminal unit is equipped with ON/OFF control by room thermostats via thermo hydraulic actuator. The hydraulic balancing was solved with manual valves. Due to high energy bill and unsatisfied users the owner of the building has done a study regarding renovation possibilities in 2007. The study pointed out that the reason of problems came from insufficient balancing mainly. Consequently the owner decided that they change the manual balancing valve to automatic flow limiter (AB-QM). In this project the thermal actuators remain the original because they fit to AB-QM valve with adapter. The AHU system was not renovated either. The installation of new valves was done in 2008.

USED DANFOSS EQUIPMENT FOR RENOVATION (IN 2008)

A | AB-QM pressure independent balancing motorised flow limiter for fan-coils
Dimension: DN 10-20 (56 -56 pcs.)

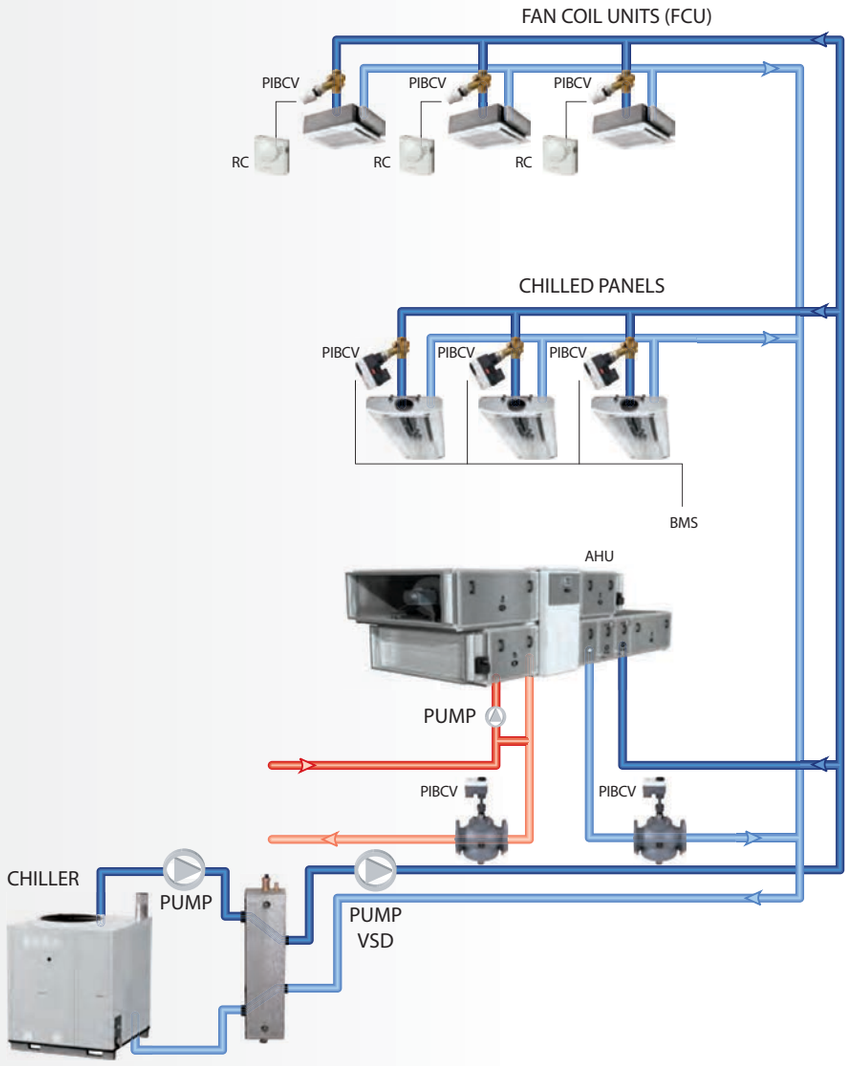

PIBCV – Pressure Independent Balancing Control Valves (as a flow limiter)
RC – Room Controller
BMS – Building Management System
VSD – Variable Speed Drive

SAVINGS

Investment type	AB-QM renovation Heating*	AB-QM renovation Cooling
Investment costs [€]	3933	5199
Av. yearly energy saving [GJ] / [kWh]	183,8	40858
Energy price (gaz) [€/GJ] / [€/kWh]	5,53	0,184
Pay back time [year]	**3,9**	**0,7**

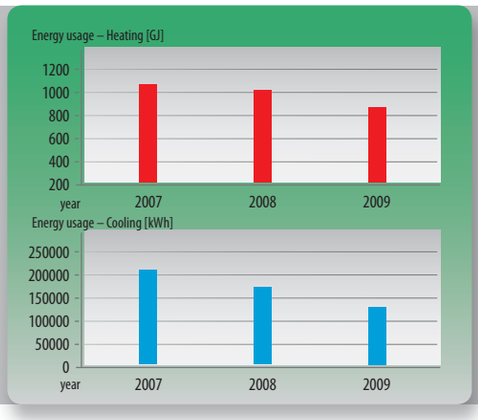

*The real pay back time of heating is better due to the renovation in 2008

INVESTMENT COSTS

Equipment	Pcs.	Price [€]	Installation costs [€]	Sum
AB-QM valves for heating	56	3411	522	3933
AB-QM valves for cooling	56	4639	560	5199

USAGE AND ENERGY SAVING OF BUILDING

	Energy usage – Heating [GJ]				Energy usage – Cooling [kWh]		Action
Year	Energy usage	Corrected energy usage to 4,87 °C	Average outdoor temp. [°C]	Average yearly energy saving [GJ]	Energy usage	Average yearly energy saving [kWh]	
2007	1120,0	1120,0	4,9		211 429		
2008	1105,0	1076,2	4,7	43,8	193 545	17 884	AB-QM installation
2009	903,0	796,1	3,9	323,9	147 598	63 831	
Average				183,8		40 858	

* The energy usage of heating contains all gas based energy consumption including domestic hot water. Due to the above mentioned period the water distribution system was modernised only, resulting in energy saving.

** The energy usage of cooling contains all electricity consumption including lightning, lift etc. Due to the above mentioned period the water distribution system was modernised only, resulting in energy saving.

CONCLUSION

The figures above show that we can save a significant amount of energy with usage of AB-QM balancing/control valve compared to traditional (manual balancing) control method. We can not tell the energy saving in percentage but the average yearly energy saving is well visible. It is more than 200 GJ in heating system based on gas usage reduction and 40 thousand kWh in cooling system based on electricity consumption reduction. From an investment point of view the installation cost is not high only the AB-QM valve itself and installation has cost money. The pay back time is acceptable 3,9 years in heating and excellent in cooling 0,7 year furthermore we can ensure much better comfort for users. Since implementation of AB-QM valves we did not face any claims problem due to bad water distribution.

5.3 AHU pumping cost comparison in commercial buildings (cooling application)

Type of building	Name of project	Main data	Picture of building
special shaped middle high building	**Tampines Mall Singapore**	• Address: Tampines Central 5 • *Air Handling Unit application:* *Measurement 1):* *AHU is equipped with traditional control element* (manual balancing valves and MCV) as a constant flow system *Measurement 2):* AHU is equipped with PIBCV as a variable flow system	

THE PROJECT

The selected building is a shopping mall. The main purpose of measurement is to prove the energy efficiency of PIBCV control in variable flow system to be compared with traditional control in constant flow system (typical application). In the first step we have measured a selected AHU namely the flow and return temperatures furthermore the blow in and room temperatures. We have done the same measurement on the same AHU after renovation (installation of AB-QM valve).

The AHU control was arranged by 0-10V proportional controller.

For measurement we have chosen equal circumstances like usage of space and external weather conditions.

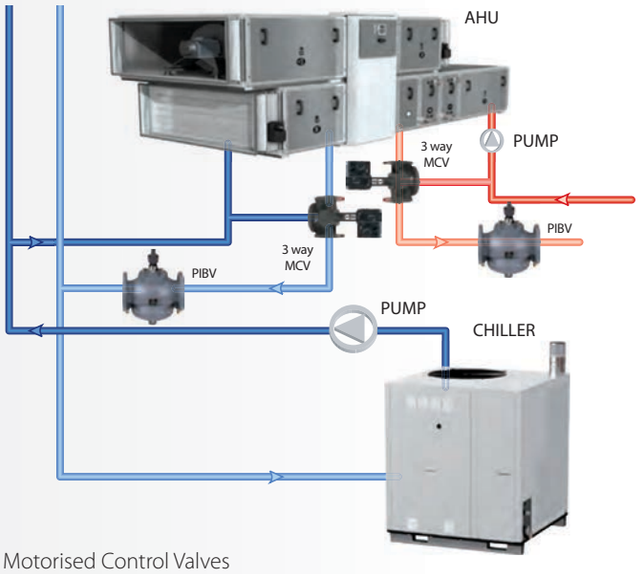

MCV – Motorised Control Valves
PIBV – Pressure Independent Balancing Valves (as a flow limiter)
AHU – Air Handling Unit

USED DANFOSS EQUIPMENT FOR NEW BUILDING (IN YEAR 2008)

A | AB-QM pressure independent balancing control valve for air handling units
Dimension: DN 50 (1 pcs.)
The calculation on the following page refers to AHU only

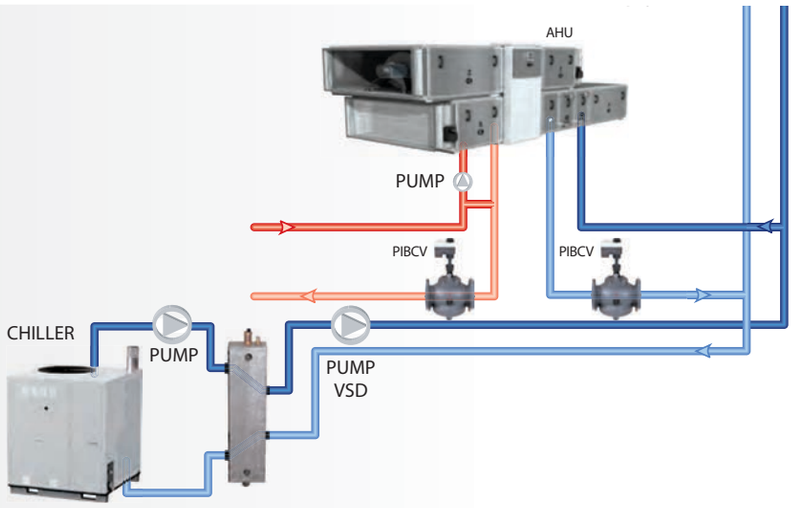

PIBCV – Pressure Independent Balancing Control Valve
AHU – Air Handling Unit

SAVINGS

Investment type	Traditional	AB-QM renovation
Investment costs [€]	–	1127
Yearly circulation cost [kWh/AHU]*	7.296	3.356
Av. yearly energy saving [GJ] / [kWh]	–	3.940
Energy price (gaz) [€/GJ] / [€/kWh]	0,084	0,084
Pay back time [year]		**3,4**

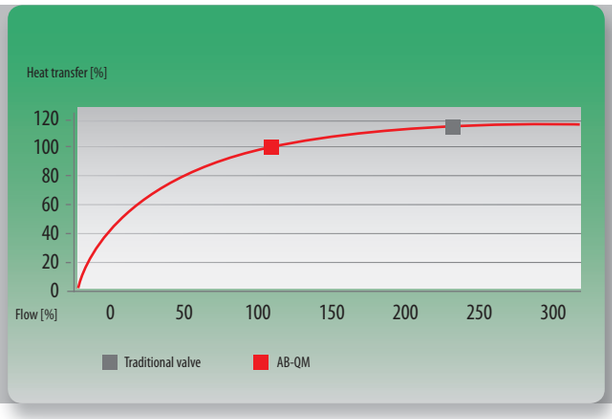

* Length of season: 330 days, working hours: 16 hour/day

INVESTMENT COSTS

Equipment	Pcs.	Price [€]	Installation costs [€]	Sum
AB-QM installation	1	1004	123	1127

CIRCULATED FLOW CALCULATION BASED ON COOLING CAPACITY AND TEMPERATURE DROP ON AHU IN DIFFERENT APPLICATIONS

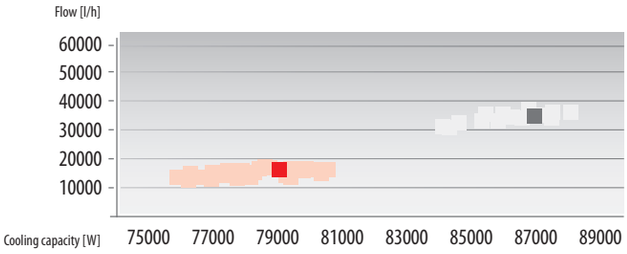

Traditional valve. Average: Flow = 35.000 l/h, Cc = 87.000 W

AB-QM. Average: Flow = 16.000 l/h, Cc = 79.000 W

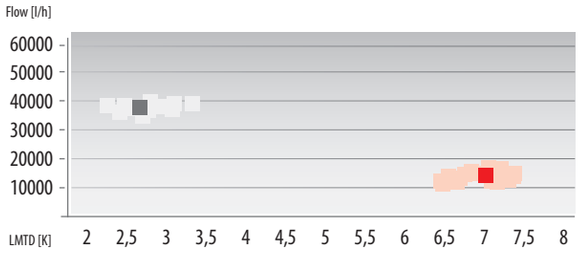

Traditional valve. Average: Flow = 35.000 l/h, ΔT = 2,6 K

AB-QM. Average: Flow = 16.000 l/h, ΔT = 5 K

CONCLUSION

From the diagram above is well visible that the constant flow system requires continuous nominal flow independent of the real demand. In case of usage of AB-QM the expected seasonal average flow is less than half of the nominal flow. This brings us significant energy saving potential. The pumping power demand is 54% less. With other words we can say that the cost of circulation is 46% compared to traditional solution.

From an investment point of view the pay back time gives the opportunity to make a decision. It is in our case 3,4 years, this results in a very good investment. Particularly if we take into consideration the increasing energy efficiency of chiller and increased comfort with AB-QM valves.

6.1 Energy saving in macro scale

Type of building	Name of project	Main data	Picture of building
 a lot of different buildings	**Building Society „Wspólny Dom", Szczecin, Poland**	• Number of buildings: 149 multifamily and 199 single family houses 61 pcs. high – 12 stories – buildings 88 pcs. small – 5 stories – buildings • Number of flats: 12.000 • Heated surface: 600.000 m² • Number of tenants: 31.000	

SYSTEM DESCRIPTION BEFORE RENOVATION:

- Original wall construction and traditional windows are used according temporarily standard
- Heating: two-pipe heating system with manual valve and hand wheel on radiators furthermore manual balancing valves in risers. Temperature regime 90/70°C, supplied from district heating sub-station.
- Domestic hot water (DHW) (90% of building is equipped): circulation pipeline with manual water distribution. The set temperature is 55°C.

SYSTEM DESCRIPTION AFTER RENOVATION:

- Thermal insulation of wall, roof and basement according new norm
- All radiators equipped with thermostatic radiator valve and heat cost allocator
- The hydraulic balancing is optimised by automatic (pressure differential) riser controller
- The DHW circulation system was modernised with a thermal balancing valve.

THE PROJECT

93% of the buildings were built before 1992. The modernisation of the buildings started in 1995 and was finalised in 2005. During this 10 year period, 418.052 m² wall and half of the building's roof surface was insulated and 10.700 windows were exchanged. In the same time the heating and DHW system were modernised with TRVs, automatic balancing valves in heating pipelines and thermal balancing valves in the DHW circulation.

To save energy for the tenants, individual radiators were equipped with heat cost allocators. This project included modernisation of 128 sub-stations, also split of 3 big central sub-stations into 15 smaller ones and exchanged weather compensators. The modernisation was performed successively building by building: financial resources allowed executing modernisation of 8 to 14 buildings every year, including all elements mentioned above.

The modernisation program resulted in a reduced 'power order' for the building society from their District Heating Company:
- reduction of 43% for their heating system. From 51 MW in 1995 to 29 MW in 2005.
- reduction of 72% for their water system. From 28 MW in 1995 to 8 MW in 2005.

These savings also influence the total energy expenses, since the District Heating Company charge to end-users.

A | Thermostatic radiator valves for each radiator: RTD-N + thermo head RTD Dimension: DN 10-15-20 (37.000 pcs.)

B | Differential pressure controller pair in the bottom of the heating risers: ASV-PV + ASV-M Dimension: DN 15-32 (9.300 pcs. Danfoss and 530 other)

C | MTCV return temperature limiter basic version was installed in all bottom of DHW circulation risers Dimension: DN 15-20 (3.000 pcs.)

SAVINGS

	Heating [GJ]	Hot water [GJ]		Heating [MW]	Hot water [MW]
Energy consumption in 1995	436778	259842	Power order in 1995	51	28
Energy consumption in 2005	180586	124499	Power order in 2005	29	8
Reduction [%]	**59%**	**52%**		**43%**	**72%**

ESTIMATED PAY BACK TIME FOR ALL INVESTMENTS 3,8 YEARS

"Power order" from District Heating Company in MW for heating and hot water

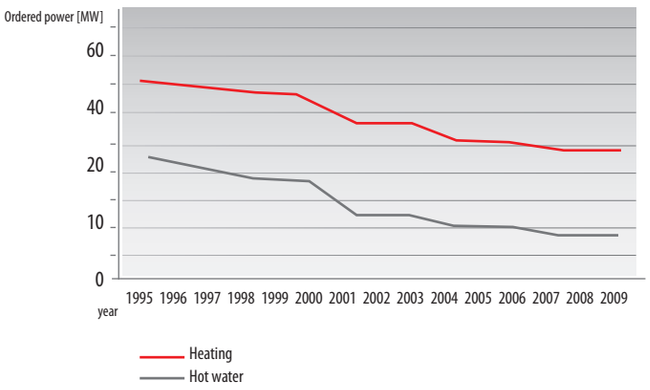

Energy consumption for heating and hot water system

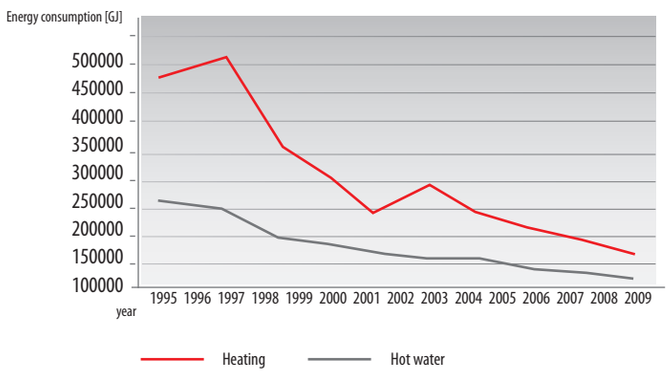

Energy prices in Poland in EU/GJ

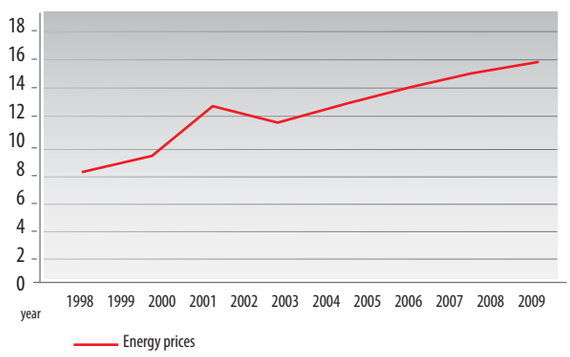

CONCLUSION

All Building Society's expenses for the heating system were reduced from 12.415.487 PLN in 1998 to 10.625.818 PLN in 2005.
• today Building Society pay 15% less than in 1998, despite of the fact that energy prices increased in this period with 52%.
All Building Society's expenses for the hot water system was reduced from 6.629.081 PLN in 1998 to 4.944.740 PLN in 2005.
• today Building Society pay 24% less than in 1998, despite of the fact that the energy prices increased in this period with 52%

With a reliable and competent supplier like Danfoss excellent results of saving energy, and thus money, can be achieved. The estimated pay back time for all these investments is 3,8 years.

6.2 Energy saving in macro scale

Type of building	Name of project	Main data	Picture of building
 a lot of differnt buildings	**Building Society „Osiedle Młodych", Poznań, Poland**	• Number of buildings: 290 buildings 37 pcs. – 16 stories – buildings 35 pcs. – 12 stories – buildings 218 pcs. – 5 stories – buildings • Number of flats: 30 957 • Heated surface: 1 683 214 m² • Number of tenants: 90.000	

SYSTEM DESCRIPTION BEFORE RENOVATION

- Original wall construction and traditional windows are used according temporarily standard.
- Heating: two-pipe heating system with manual valve and hand wheel on radiators furthermore manual balancing valves in risers.

Temperature regime 90/70°C, supplied from district heating sub-station.

- Domestic hot water (DHW) (90% of building is equipped): circulation pipeline with manual water distribution. The set temperature is 55°C.

SYSTEM DESCRIPTION AFTER RENOVATION

- Thermal insulation of wall, roof and basement according new norm.
- All radiators equipped with thermostatic radiator valve and heat cost allocator.
- The hydraulic balancing is optimised by automatic (pressure differential) riser controller.
- The DHW circulation system was modernised with a thermal balancing valve.

THE PROJECT

- Osiedle Młodych" Housing Cooperative (HC) in Poznan was founded in 1958.
- The Cooperative has started erecting residential buildings in the Rataje district in 1966.
- Before 1994 all buildings in the Rataje district (excluding „Stare Żegrze" and „Polan" Housing Estates) were built from pre-fabricated elements produced by the local Rataje plant.
- In 1983 – 1991 "Stare Żegrze" and "Polan" Housing Estates buildings were constructed from the pre-cast concrete slabs – Szczecin technology.
- More than 60% of the buildings were erected in the time when the thermal conductivity for walls was equal to 1,16 W/m², and that for flat roofs – 0,87 W/m².
- Today insulation materials for walls and flat roofs are designed with a thermal conductivity below 0,25 W/m².
- The first thermo-modernisation works was carried out in 1987-1995 and included:
- Insulation of external walls, within the framework of the technological shortcomings elimination program. During the first years of this program it was financed by the State by credit remittal and then later by subsidies.
- At the same time 303 in-house heating distribution centres were equipped with meters. Also hot water supply sub-meters, to divide heating energy costs for central heating and hot water supply, were installed. These moderations were mainly financed out of subsidies. Installation of flat water meters was performed intensively at the same time.
- The second step of modernisation of the buildings started in 1996 and was finalised in 2005. In this 10 years period 760 000 m² wall and half of the building's roof surface was insulated and 65000 windows were exchanged. In the same time the heating and DHW system was modernised with TRVs, automatic balancing valves in the heating pipeline and a thermal balancing valve in DHW circulation.

For motivation of tenant's energy saving the radiators were equipped with heat cost allocators. This project included modernisation of 303 sub-stations also weather compensators and heat meters. The modernisation was performed building by building.

- By the end of 2007 the Cooperative installed more than 84.000 individual flat water meters (for hot and cold water).

A | Thermostatic radiator valves for each radiator were installed.
Danfoss: RTD-N + thermo head RTD
Dimension: DN 10-15-20 (120.000 pcs.)

B | Differential pressure controller pair in the bottom of the heating risers: ASV-PV + ASV-M Dimension: DN 15-32 (7.000 cs. Danfoss)

C | MTCV return temperature limiter basic version was installed in all bottom of DHW circulation risers Dimension: DN 15-20 (4.000 pcs.)

SAVINGS

	Heating [GJ]		Heating & Hot water [MW]
Energy consumption in 1998	746,1	Order power in 1997	200,7
Energy consumption in 2007	506,9	Order power in 2008	119
Reduction [%]	**32%**		**41%**

ENERGY USAGE FOR HOT WATER SYSTEM IN THAT TIME WAS REDUCED WITH 49%

ENERGY USAGE AND ENERGY SAVING OF BUILDINGS

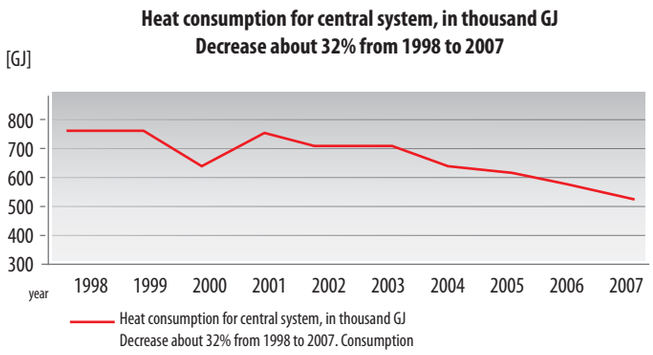

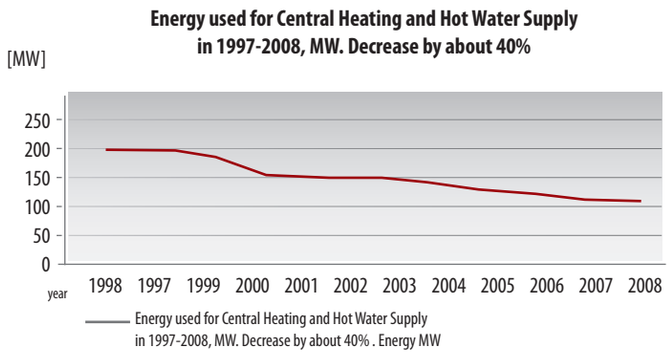

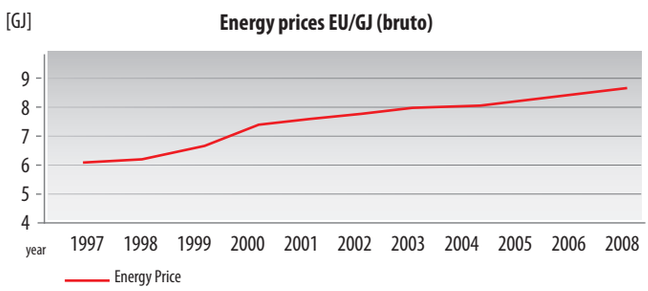

CONCLUSION

With a reliable and competent supplier like Danfoss excellent results of saving energy, and thus money, can be achieved.

- The calculations show that with 1,66 mln m^2 of the HC heated area and no investment of thermo-modernisation the annual central heating costs could be 42,4mln PLN based on government prices in 1997. The subsidies would then cover the difference with real costs.
- Considering a 50% increase in heating energy costs and the same rise of tenants' payments, the annual central heating costs could be 63,6mln PLN in 2008.
- The real annual central heating costs, considering the current prices and heat consumption at the previous year, is only about 29,5 mln PLN.
- Thus the above 33 mln PLN savings of the central heating costs resulted from the changes in heating energy system and conducted thermo-modernisation works.

6.3 Energy saving in macro scale

Type of building	Name of project	Main data	Picture of building
 a lot of different buildings high building	**Thermo-modernisation of Warsaw Housing Cooperative (WHC), Warsaw**	• Number of buildings: 397 multifamily buildings Including tall buildings 40% – 12 stories and 60% of 5 stories buildings. • Number of flats: 26374 flats • Heated surface: 1.197.000 m² • Number of tenants: 100.000	

SYSTEM DESCRIPTION BEFORE RENOVATION

- Original wall construction and traditional windows are used according temporarily standard.
- Heating: two-pipe heating system with manual valve and hand wheel on radiators furthermore manual balancing valves in risers. Temperature regime 90/70°C, supplied from district heating sub-station.
- Domestic hot water (DHW)(90% of building is equipped): circulation pipeline with manual water distribution. The set temperature is 55°C.

SYSTEM DESCRIPTION RENOVATION

- Thermal insulation of wall, roof and basement according new norm
- All radiators equipped with thermostatic radiator valve and heat cost allocator
- The hydraulic balancing is optimised by automatic (pressure differential) riser controller
- The DHW circulation system was modernised with a thermal balancing valve.

THE PROJECT

- Warsaw Housing Cooperative (WHC) was founded on December 11, 1921
- From 1996 installation of Danfoss valves and thermostatic sensors have been successively started.
- Heat meters and heat cost allocators were installed to charge tenants individually.
- In 1999 thermo-modernisation process of WHC assets, including house insulation, replacement of windows, insulation of attic roofs as well as modernisation or changing of central heating and hot water supply systems, has been started.
- Until 2007 around 100 000 balancing valves and thermostatic sensors, 300 ASV-I/ASV-PV balancing valves, 600 USV-I/USV-M valves and around 1500 MTCV valves were installed on hot water supply systems.
- By 2007 thermo-modernisation of 333 houses, built before 1995, was finished.
- In 2003-2007 – 250 houses in total were modernised. The costs are estimated to be 100.000.000 PLN (25 Million Euro).
- The scope of the thermo-modernisation processes in WHC is: installation of two-pipe central heating systems in houses, installation of balancing valves and thermostatic sensors, installation of heat cost allocators, modernisation of local heating distribution systems – SPEC (Enterprise of Heating Energy in Warsaw), insulation of external walls by polystyrene sheets of 10 cm thickness, roof insulation, installation of balancing valves on hot water and central heating risers, changing of windows on staircases and in basements, insulation moderations were performed simultaneously with central heating system modernisation.

USED DANFOSS EQUIPMENT FOR HEATING AND DHW RENOVATION (1996 -2005 CONTINUOUSLY)

A | Thermostatic radiator valves for each radiator: RTD-N + thermo head RTD
Dimension: DN 10-15-20 (100.000 pcs.)

B | Differential pressure controller pair in the bottom of the heating risers: USV-I/M and ASV-PV and ASV-I
Dimension: DN 15-32 (900 pcs. Danfoss)

C | MTCV return temperature limiter basic version was installed in all bottom of DHW circulation risers
Dimension: DN 15-20 (1.500 pcs.)

SAVINGS

	Heating [GJ]	Hot water [GJ]
Energy consumption in 2000	601455,4	254022
Energy consumption in 2009	326746	168766
Reduction [%]	**46%**	**34%**

HEATING COSTS DECREASED AROUND 22%
ENERGY PRICES INCREASED 18%

Based on given facts we can see the following results:

Heating costs decreased by around 22%, while prices increased by 18% and total area of WHC was extended by 78000 m^2. In 2007 WHC paid 8.755.280 PLN less for heating energy than in 2003

ENERGY USAGE AND ENERGY SAVING OF BUILDINGS

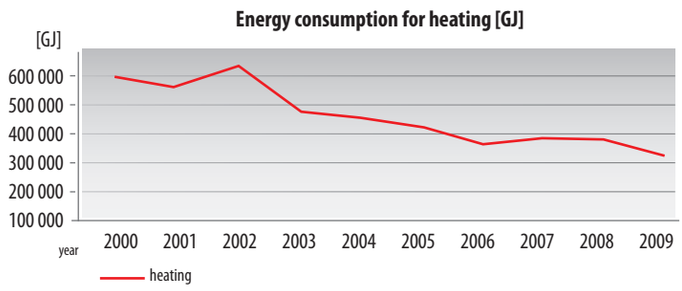

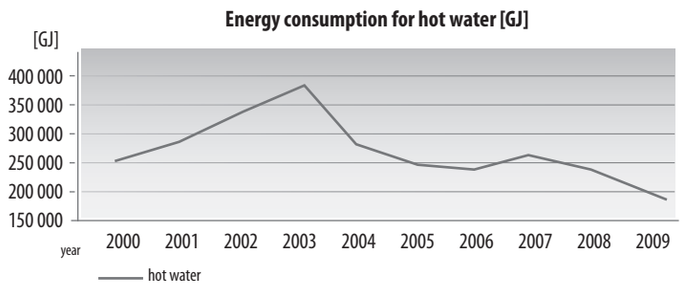

Heating energy costs in WHC in 2002-2007 in million PLN (1 million PLN app. 250th Euro)

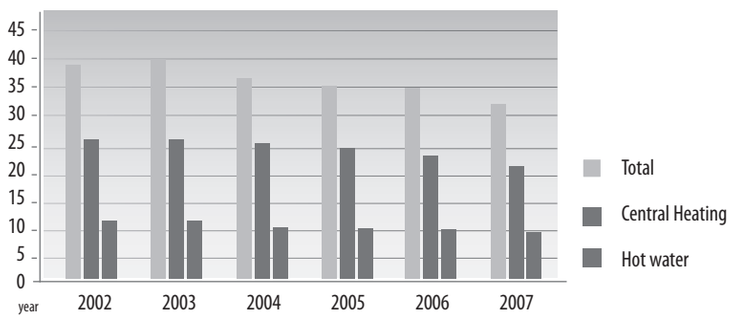

CONCLUSION

- Due to thermo-modernisation actions in the years 2002-2007, total costs of heating energy supply were cut by 20% from 41 000 000 to 33 000 000 PLN.
- Thermo-modernisation credit enabled to carry out systematic improvements and the financial burden was not put on tenants.
- Tenants did not bear any financial risk at the moment of WHC credit application – bank had credit guarantee in the form of WHC bank accounts and incomes from non-residential area renting.
- Money, saved due to lower heating costs, was used to pay the credit.
- Except for financial aspects, heating comfort as well as appearance of the houses was improved.

With a reliable and competent supplier like Danfoss excellent results of saving energy, and thus money, can be achieved.

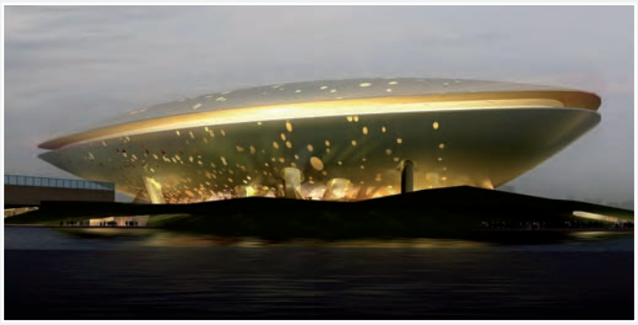

Location:
Shanghai, China

Project:
World Expo
Performance Centre

Application:
AB-QM for Heating
and Cooling

Location:
Frankfurt, Germany

Project:
Tower 185

Application:
AB-QM for Heating
and Cooling

Location: Gdynia, Poland
Project: Sea Towers
Application: AB-QM for Heating and Cooling

Location: Frankfurt, Germany
Project: Deutsche Bank
Application: AB-QM for Heating and Cooling

Location: Bangalore, India
Project: Hotel Gardenia
Application: AB-QM for Heating and Cooling

Devex® systems
heating\cooling\insulation excellence

evex Systems specialises in heating, cooling and insulation solutions for new and existing buildings in residential, commercial and industrial environments.

For more information on any of our product lines, please contact us at:
1800 636 091 or **info@devexsystems.com.au**
www.devexsystems.com.au

DEVI™ Heating Systems
FLOOR HEAT® AUSTRALIA
Danfoss
COMFORTLINE™
Schwank INNOVATIVE HEATING SOLUTIONS

Unit 5, 83 Bassett Street Mona Vale \ PO Box 707 Mona Vale NSW 1660
T 1800 636 091 \ F 02 9997 7852
E info@devexsystems.com.au \ W www.devexsystems.com.au
Devex Systems Pty Ltd \ ACN 122 894 562

Devex® systems
heating\cooling\insulation excellence

BROCDFS101.1